YAMAHA

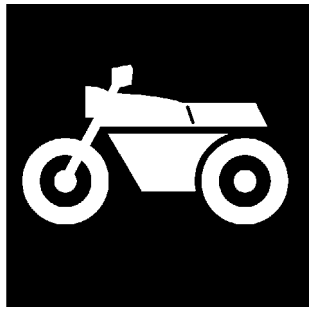

CATALOGO DE REPUESTOS

FZ8-S (42PG) EUROPE

1N42P-352S1

( )

YAMAHA GENUINE Parts & Accessories

FZ8-S
CATALOGO DE REPUESTOS
©2013 por Yamaha Motor Co., Ltd.
1ª edición, septiembre 2013
Todos los derechos reservados.
Toda reproducción o uso no autorizado
sin el consentimiento escrito de
Yamaha Motor Co., Ltd.
quedan expresamente prohibidos
Impreso en Japón.

PROLOGO

Este catálogo de repuestos corresponde a las piezas para el o los modelos que figuran en la página de portada. Al formular el pedido de repuestos, se ruega citar este catálogo y especificar correctamente el número y el nombre de las piezas.

1. Las modificaciones y agregados que se hayan realizado después de la edición de este Catálogo de Repuestos, serán anunciados en las Informaciones de Recambios.
   Es recomendable que se hagan las correcciones necesarias en el Catálogo de Repuestos de acuerdo con las Informaciones de Recambios.

2. Abreviaciones
   En este. Catálogo de Repuestos se emplean las siguientes abreviaciones.

   "UR" Usar el número de partes especificado
   "UN" Usar la cantidad necesaria
   "AP" Piezas sustitutivas
   "LM" Fabricación local (Hay que pedir los repuestos en las cercanías)
   "F#" Nº de bastidor (Nº aplicable a la máquina)
   "O/S" Sobredimensionado

3. La cantidad de componentes para el montaje
   - Los componentes, suministrados como conjunto, se describen con un punto (.) que precede al nombre del parte como se indica a continuación.
   - La numeración que aparece a la derecha de cada descripción indica la cantidad de partes por cada unidad de conjunto.

CODIGO Nº	DESCRIPCION	CANT.	OBSERVACIONES
2F5–83310–60	ENSAMBLAJE DE LA LUZ	2	
115–83311–60	.BOMBILLA (6V–18W)	1	

4. Los colores de los componentes se indican como sigue en la columna de "OBSERVACIONES".

CODIGO Nº	DESCRIPCION	CANT.	OBSERVACIONES
2N4–24110–00–X5	COMP. DEL TANQUE	2	MXR
3J1–24240–10	.GRAFICO, DEL TANQUE	1	PARA MXR

5. Debe tenerse en cuenta que las ilustraciones sirven como guia para la búsqueda de los números de partes y no deben usarse para el montaje. Durante el montaje, se recomienda usar el manual de taller correspondiente.

6. EL asterisco (*) antes del número de referencia indica los elementos modificados después de la primera edición.

7. Números de serie

Nº de Serie del motor

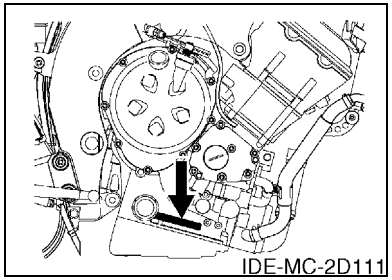

Nº de Serie del bastidor

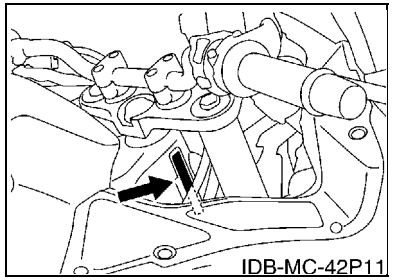

8. Códigos de color aplicables (El símbolo (*) muestra el color de modelo.)

Abreviatura	Nombre de color	Código de color
DNMN(*)	DARK GRAY METALLIC N	1366
LGB	LOW GLOSS BLACK	0098
MBL2	MAT BLACK 2	0582

ROTULO DE MODELO

(1) El rótulo llamada “Rótulo de Modelo” está en la ubicación indicada abajo en el (3). Cuando se utilice este catálogo de repuestos, se ruega cotejar entre el “código de modelo–número de código de producción” del catálogo y el “código de modelo–número de código de producción” indicado en el Rótulo de Modelo fijado en el producto correspondiente.

(2) Indicación del “Rótulo de Modelo”

a b	
○ xxxx – xxx	○ 4TW1–010
● x c	● A

a: Código de tipo de Modelo

b: Número de código de Producción

c: Tipo de color

(3) Ubicación de fijación del Rótulo de Modelo

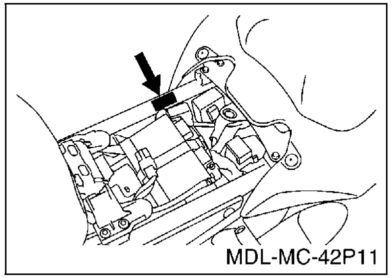

(4) Información de Color

Código de Modelo	Código de tipo de color	Código de color	Nombre de color	Abreviatura
42PG	A	1366	DARK GRAY METALLIC N	DNMN

(5) Código de Modelo–Número de código de Producción del Modelo Listado en este Catálogo de Repuestos

Código de Modelo	Número de Código de Producción	País (destino)	Código de Modelo	Número de Código de Producción	País (destino)
42PG	010	SPAIN			

CONTENIDO

MOTOR

CULATA DE CILINDRO 1
CILINDRO 3
CIGUENAL & PISTON 4
VALVULA 5
ARBOL DE LEVAS & CADENA 7
BOMBA DE AGUA 8
RADIADOR & MANGUERA 10
BOMBA DE ACEITE 12
FILTRO ACEITE 13
ADMISION 14
ADMISION 2 16
SYSTEMA DE INDUCCION DE AIRE 18
DESCARGA 19
CARTER 20
CUBIERTA DE CARTER 1 21
ARRANQUE 23
EMBRAGUE 24
TRANSMISION 26
LEVA DE CAMBIO & HORQUILLA 28
EJE DE CAMBIO & PEDAL 29

SHASIS

CUADRO 30
GUARDABARRO 32
CUBIERTA LATERAL 34
BRAZO TRASERO 35
SUSPENSION TRASERO 37
DIRECCION 38
HORQUILLA DELANTERA 39
DEPOSITO DE COMBUSTIBLE 41
ASIENTO 43
RUEDA DELANTERA 45
CALIBRE FRENO DELANTERA 46
RUEDA TRASERA 47
CALIBRE FRENO TRASERA 49
MANILLAR & CABLE 50
CILINDRO MAESTRO DELANTERO 51
SOPORTE & APOYAPIE 52
CILINDRO MAESTRO TRASERO 55
BOVEDA 56
GENERADOR 59
MOTOR DE ARRANQUE 60
LUZ DE DESTELLADOR 61
MEDIDOR 62
FARO DELANTERO 63
LUZ DE COLA 64
INTERRUPTOR DE MANILLAR&PALANC 65
EQUIPO ELECTRICO 1 66
EQUIPO ELECTRICO 2 68

INDICE

INDICE NUMERICO 70

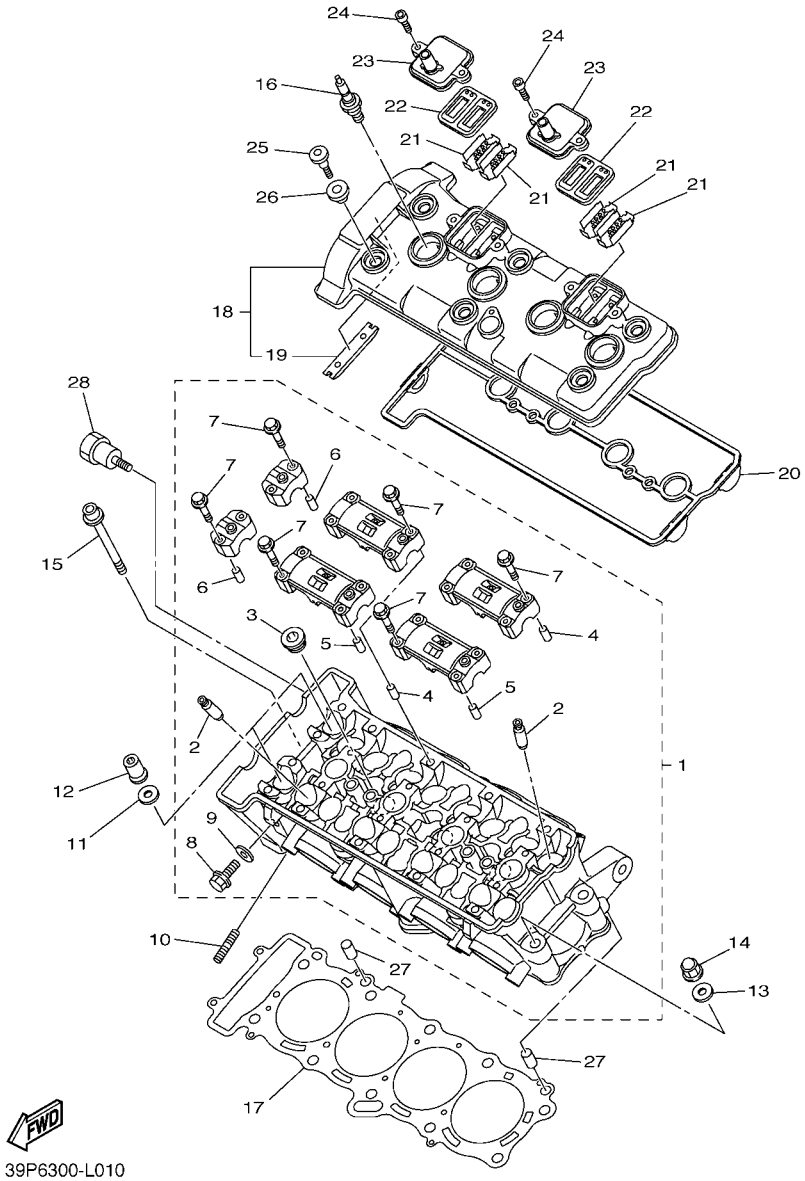

FIG. 1 CULATA DE CILINDRO

REF. Nº	CODIGO Nº	DESCRIPCION	42PG					OBSERVACIONES
1	39P–11101–09	CULATA DE CILINDRO COMPLETA	1					
2	20S–11134–10	.GUIA DE VALVULA 2	16					
3	90340–18002	.TORNILLO, DE DRENAJE	3					
4	91808–16023	.PASADOR DE CLAVIJA	4					
5	91808–16023	.PASADOR DE CLAVIJA	4					
6	91808–16023	.PASADOR DE CLAVIJA	4					
7	90105–06027	.TORNILLO	20					
8	95024–06012	.PERNO, BRIDA	1					
9	90430–06014	.JUNTA	1					
10	90116–08087	ESPARRAGO	8					
11	90201–10035	ARANDELA PLANA	8					
12	90179–10029	TUERCA	8					
13	90201–10035	ARANDELA PLANA	2					
14	90176–10075	TUERCA CORONA	2					
15	90110–06212	TORNILLO ALLEN	2					
16	94701–00318	BUJIA (NGK R CR9E)	4					
17	39P–11181–00	JUNTA, DE CULATA 1	1					
18	39P–11191–00	TAPA CULATA DE CILINDRO 1	1					
19	5BE–12241–00	.TOPE DE GUIA 2	1					
20	4C8–11193–00	EMPAQUE	1					
21	5VY–1482K–00	PLACA	4					
22	5SL–14890–10	VALVULA DE LENGUETA COMPLETA	2					
23	5VY–14899–01	TAPA, DE CAJA	2					
24	90110–06175	TORNILLO ALLEN	4					
25	90109–066F0	PERNO	6					
26	5VY–1111G–00	CASQUILLO DE GOMA	6					
27	99530–10114	PASADOR, DE ESPIGA	2					

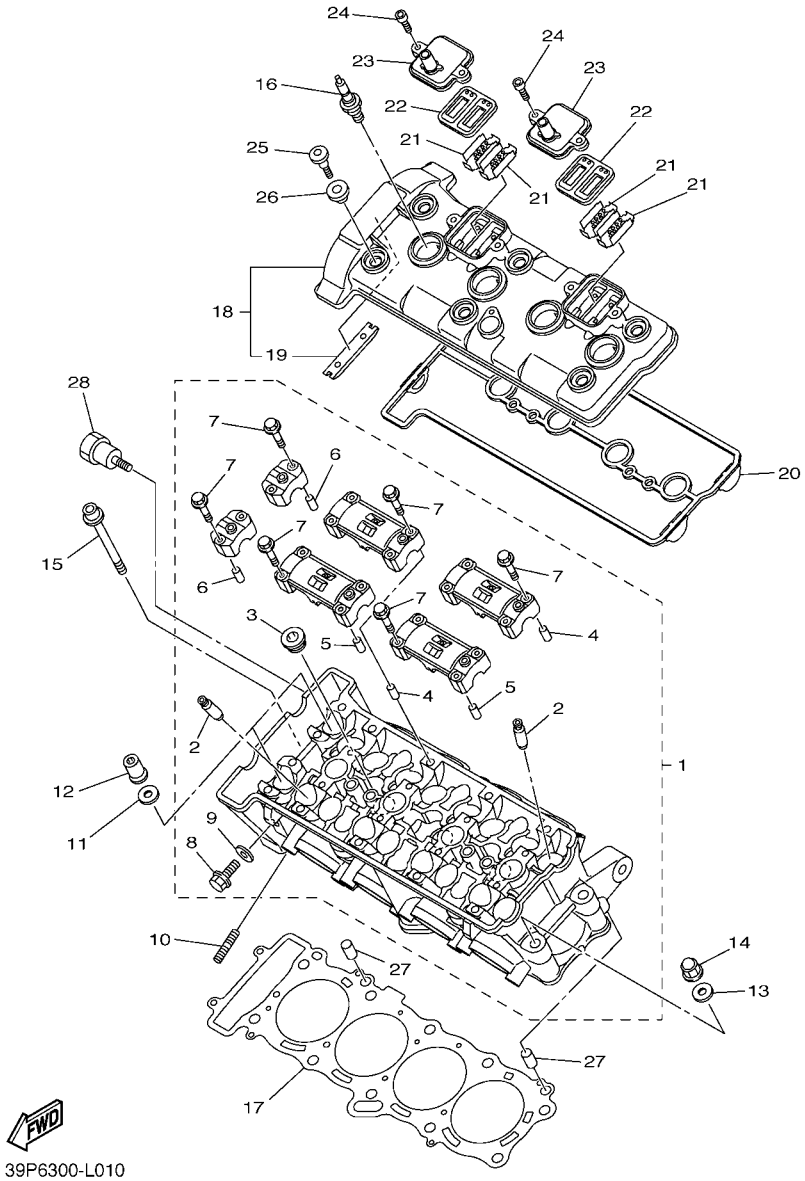

FIG. 1 CULATA DE CILINDRO

REF. Nº	CODIGO Nº	DESCRIPCION	42PG					OBSERVACIONES
28	2D1–11026–00	PERNO	1					

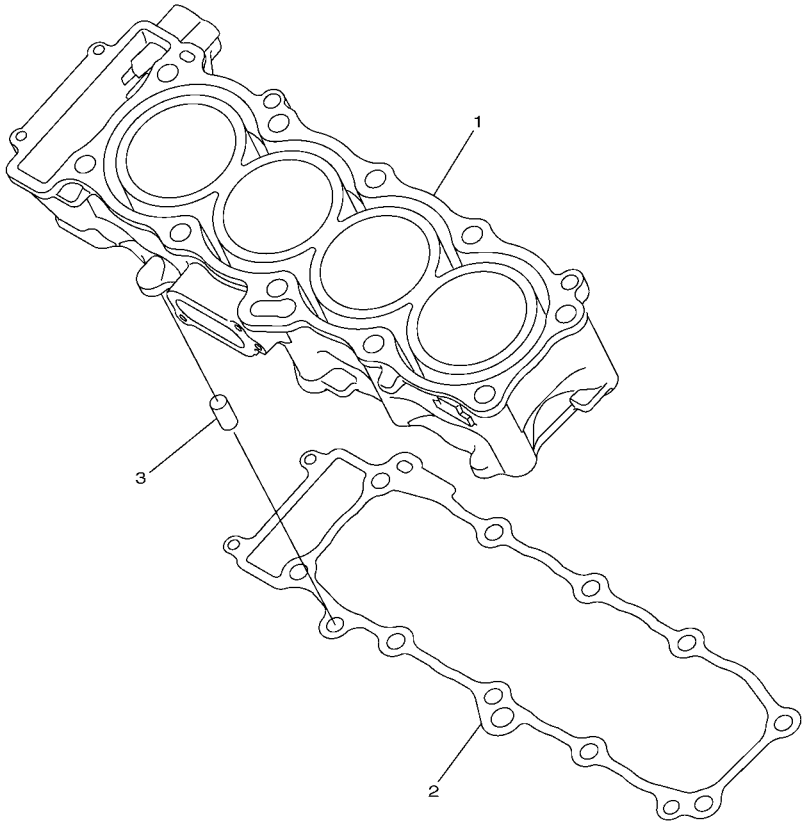

39P1300-K020

FIG. 2 CILINDRO

REF. Nº	CODIGO Nº	DESCRIPCION	42PG					OBSERVACIONES
1	39P–11311–00	CILINDRO 1	1					
2	5VY–11351–00	JUNTA, DE CILINDRO	1					
3	99530–10114	PASADOR, DE ESPIGA	2					

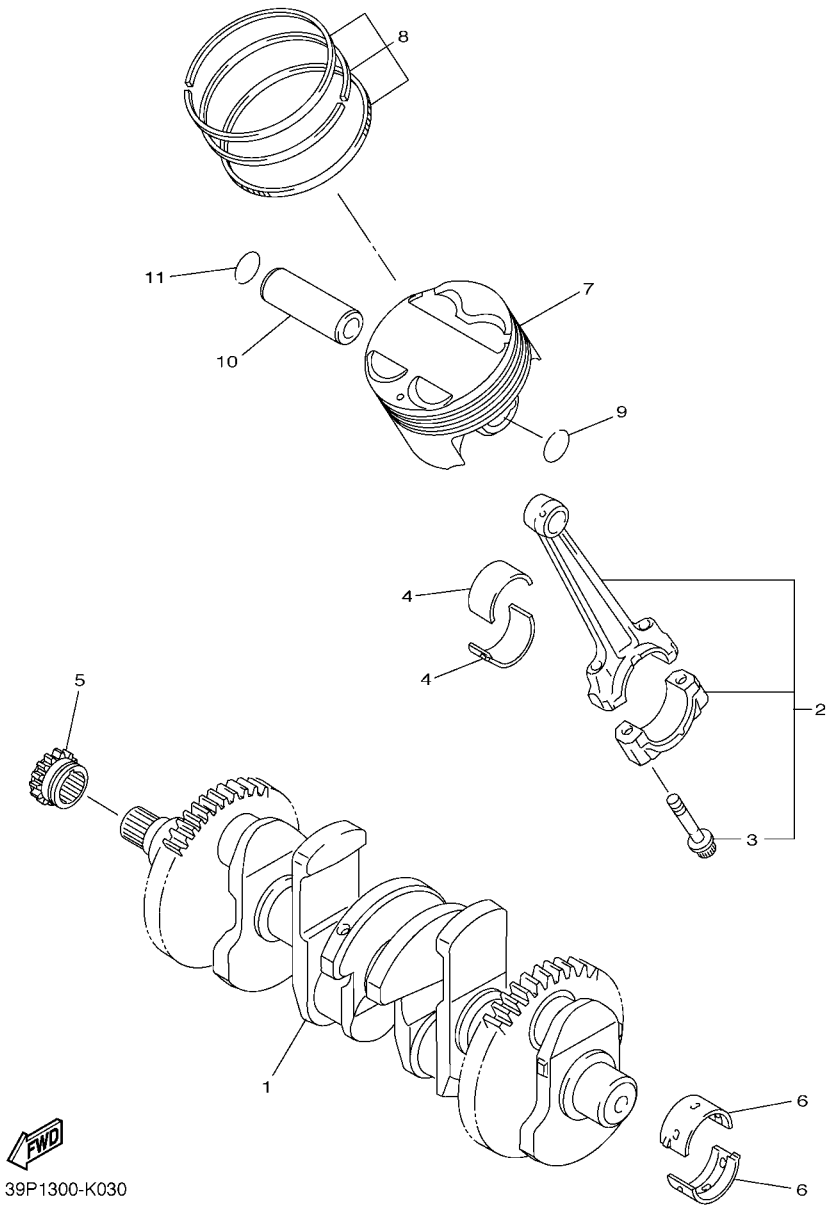

FIG. 3 CIGUENAL & PISTON

REF. Nº	CODIGO Nº	DESCRIPCION	42PG					OBSERVACIONES
1	4C8–11411–00	CIGUENAL	1					
2	14B–11650–00	BIELA COMPLETA	4					
3	5VY–11654–01	.TORNILLO DE BIELA	2					
4	2D1–11656–00	COJINETE PLANO	8					UR AZUL
	2D1–11656–10	COJINETE PLANO	8					UR NEGRO
	2D1–11656–20	COJINETE PLANO	8					UR MARRON
	2D1–11656–30	COJINETE PLANO	8					UR VERDE
5	39P–11549–00	CATALINA CADENA DE LEVA	1					
6	5VY–11416–A0	COJINETE PLANO 1	10					UR BLANCO
	5VY–11416–00	COJINETE PLANO 1	10					UR AZUL
	5VY–11416–10	COJINETE PLANO 1	10					UR NEGRO
	5VY–11416–20	COJINETE PLANO 1	10					UR MARRON
	5VY–11416–30	COJINETE PLANO 1	10					UR VERDE
7	39P–11631–00	PISTON (NORMA)	4					
8	39P–11603–00	JUEGO DE ANILLOS (NORMA)	4					
9	93450–18157	SEGURO	4					
10	39P–11633–00	PASADOR, PISTON	4					
11	93450–18157	SEGURO	4					

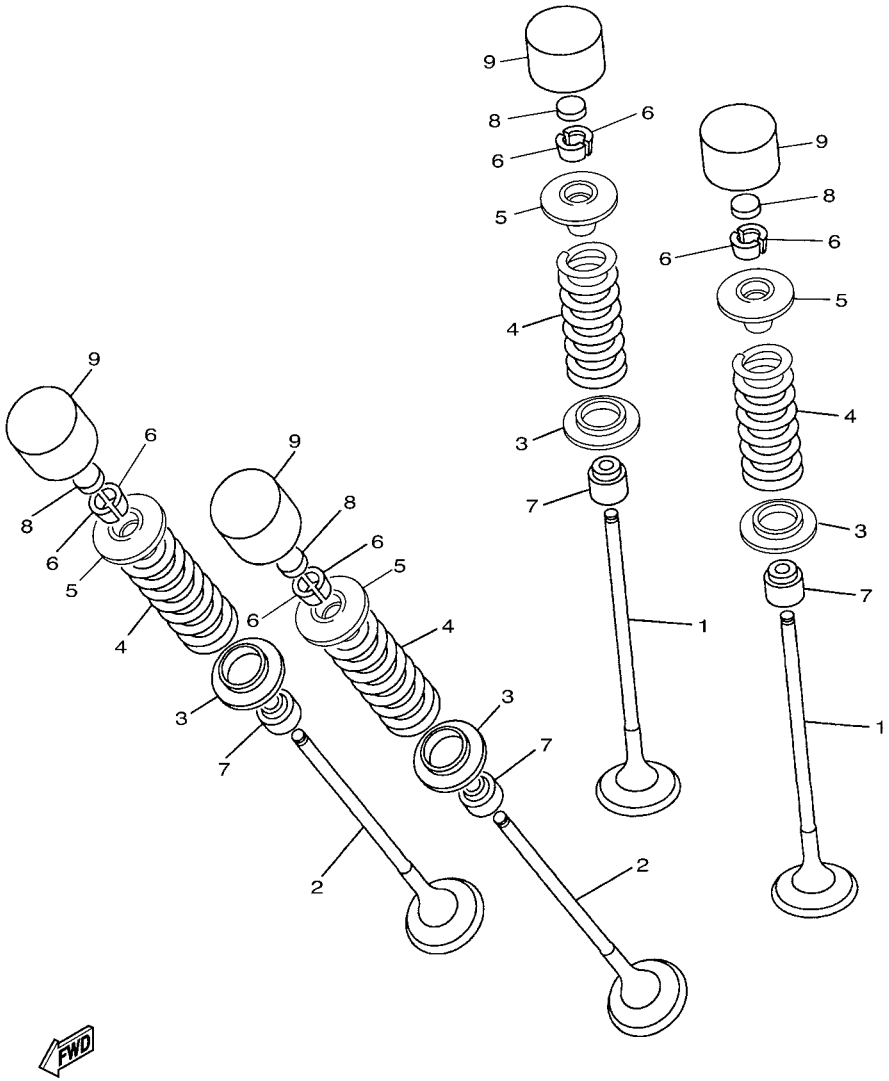

FIG. 4 VALVULA

REF. Nº	CODIGO Nº	DESCRIPCION	42PG					OBSERVACIONES
1	39P–12111–00	VALVULA DE ADMISION	8					
2	39P–12121–00	VALVULA DE ESCAPE	8					
3	5EB–12126–00	ASIENTO RESORTE DE VALVULA2	16					
4	39P–12113–00	RESORTE VALVULA INTERNA	16					
5	5EB–12127–00	RETEN RESORTE DE VALVULA	16					
6	1HX–12118–00	SEGURO DE VALVULA	32					
7	39P–12119–00	SELLO DE ACEITE VALVULA	16					
8	1HX–12168–00	COJIN, AJUSTADOR 2 (1.20)	16					UR
	1HX–12168–20	COJIN, AJUSTADOR 2 (1.25)	16					UR
	1HX–12168–40	COJIN, AJUSTADOR 2 (1.30)	16					UR
	1HX–12168–60	COJIN, AJUSTADOR 2 (1.35)	16					UR
	1HX–12168–80	COJIN, AJUSTADOR 2 (1.40)	16					UR
	1HX–12168–A0	COJIN, AJUSTADOR 2 (1.45)	16					UR
	1HX–12168–F0	COJIN, AJUSTADOR 2 (1.50)	16					UR
	1HX–12168–H1	COJIN, AJUSTADOR 2 (1.55)	16					UR
	1HX–12168–K1	COJIN, AJUSTADOR 2 (1.60)	16					UR
	1HX–12168–M1	COJIN, AJUSTADOR 2 (1.65)	16					UR
	1HX–12168–R1	COJIN, AJUSTADOR 2 (1.70)	16					UR
	1HX–12168–U1	COJIN, AJUSTADOR 2 (1.75)	16					UR
	1HX–12168–W1	COJIN, AJUSTADOR 2 (1.80)	16					UR
	1HX–12168–Y1	COJIN, AJUSTADOR 2 (1.85)	16					UR
	1HX–12169–11	COJIN, AJUSTADOR 2 (1.90)	16					UR
	1HX–12169–31	COJIN, AJUSTADOR 2 (1.95)	16					UR
	1HX–12169–50	COJIN, AJUSTADOR 2 (2.00)	16					UR
	1HX–12169–70	COJIN, AJUSTADOR 2 (2.05)	16					UR
	1HX–12169–90	COJIN, AJUSTADOR 2 (2.10)	16					UR
	1HX–12169–E0	COJIN, AJUSTADOR 2 (2.15)	16					UR

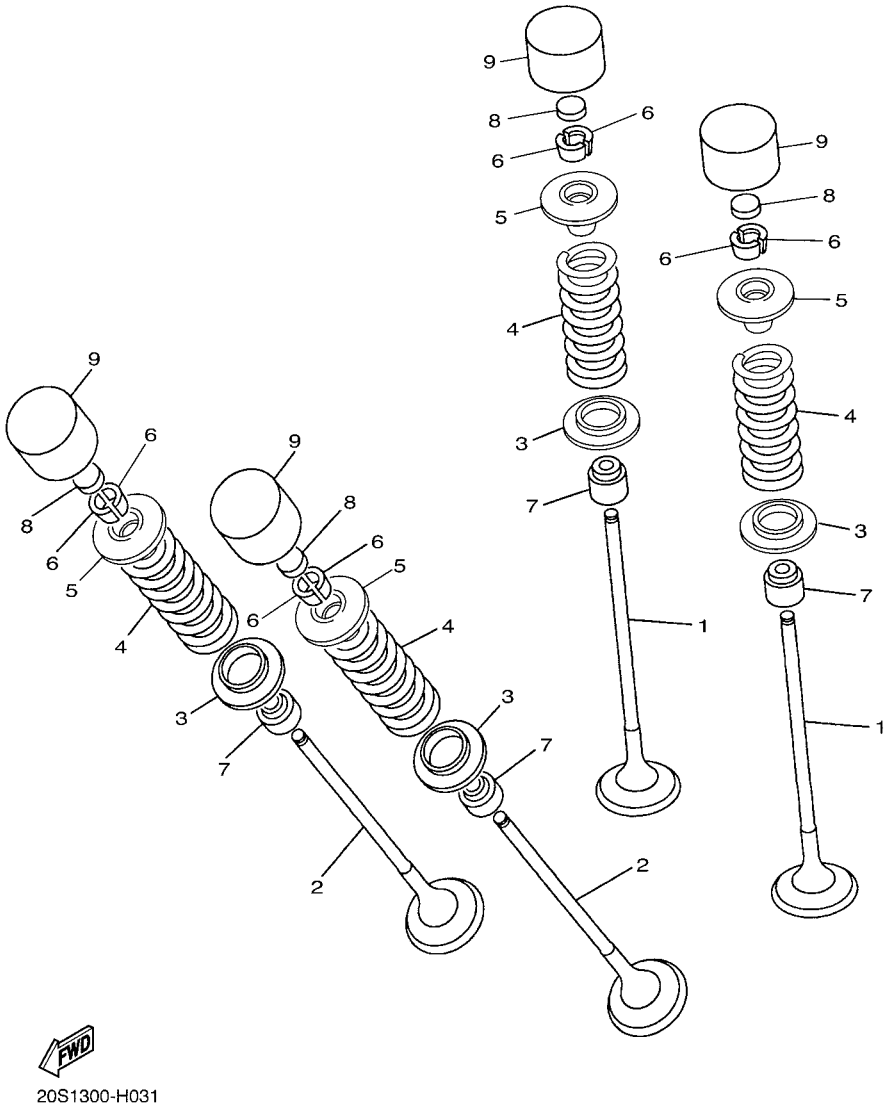

FIG. 4 VALVULA

REF. Nº	CODIGO Nº	DESCRIPCION	42PG					OBSERVACIONES
8	1HX–12169–G0	COJIN, AJUSTADOR 2 (2.20)	16					UR
	1HX–12169–J0	COJIN, AJUSTADOR 2 (2.25)	16					UR
	1HX–12169–L0	COJIN, AJUSTADOR 2 (2.30)	16					UR
	1HX–12169–N0	COJIN, AJUSTADOR 2 (2.35)	16					UR
	1HX–12169–T0	COJIN, AJUSTADOR 2 (2.40)	16					UR
9	5EB–12153–10	LEVANTADOR DE VALVULA	16					UR AMARILLO
	5EB–12153–09	LEVANTADOR DE VALVULA (O/S)	16					AP VERDE

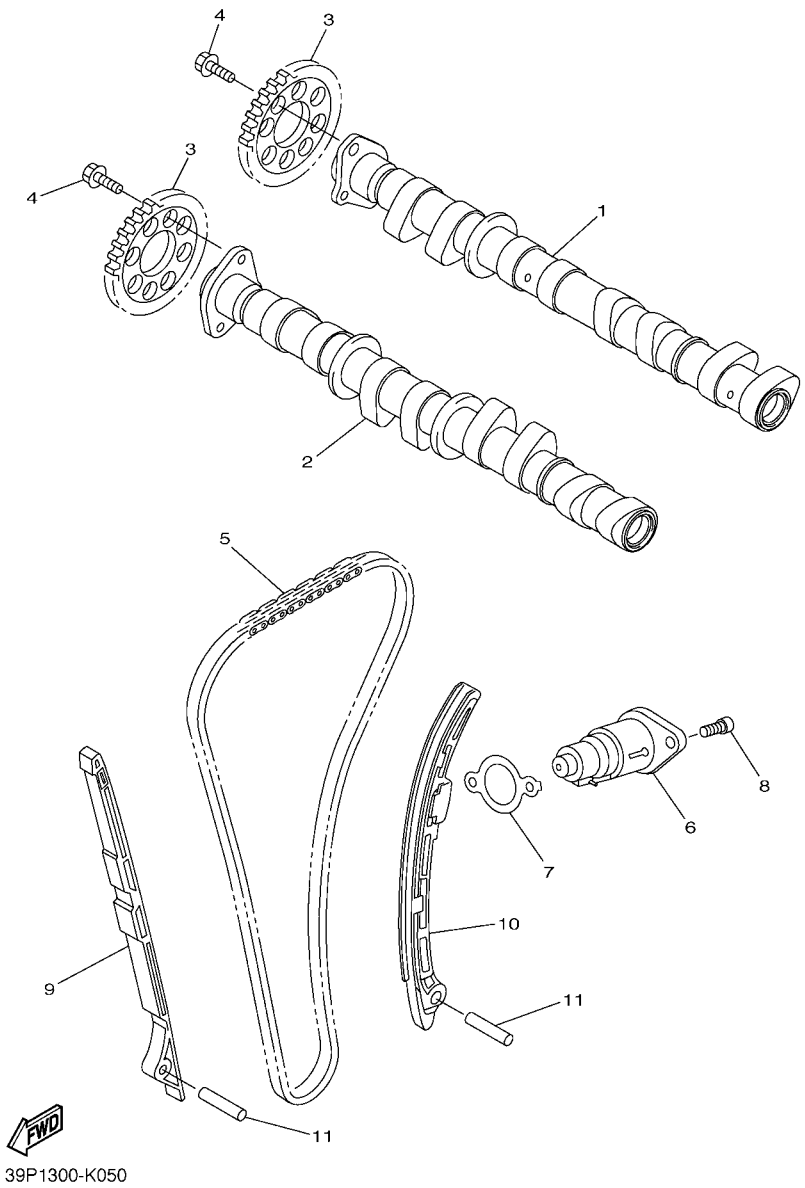

FIG. 5 ARBOL DE LEVAS & CADENA

REF. Nº	CODIGO Nº	DESCRIPCION	42PG					OBSERVACIONES
1	39P–12170–00	ARBOL DE LEVAS COMPLETO 1	1					
2	39P–12180–00	ARBOL DE LEVAS COMPLETO 2	1					
3	20S–12176–00	CATALINA DE CADENA	2					
4	90105–07004	TORNILLO	4					
5	94591–68124	CADENA	1					
6	39P–12210–01	TENSOR CADENA DE LEVA	1					
7	2D1–12213–00	EMPAQUE DE CAJA TENSOR	1					
8	90110–06253	TORNILLO ALLEN	2					
9	4C8–12251–00	AMORTIGUADOR CADENA 1	1					
10	4C8–12252–00	AMORTIGUADOR CADENA 2	1					
11	93607–44002	PASADOR DE CLAVIJA	2					

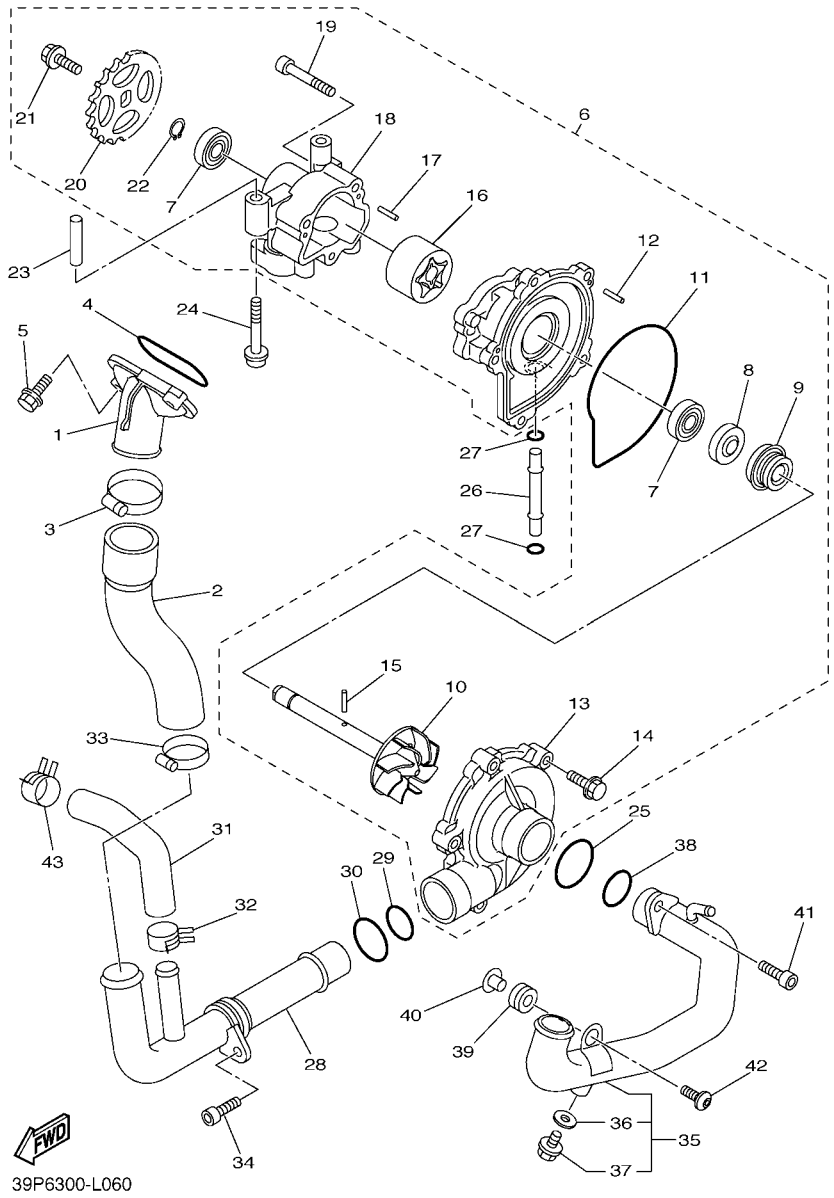

FIG. 6 BOMBA DE AGUA

REF. Nº	CODIGO Nº	DESCRIPCION	42PG					OBSERVACIONES
1	14B–12469–10	CONDUCTO	1					
2	39P–12576–00	MANGUERA 1	1					
3	90450–38040	BRIDA, MANGUERA	1					
4	93210–46044	ANILLO O	1					
5	95024–06025	PERNO, BRIDA	2					
6	4C8–12420–21	BOMBA DE AGUA COMPLETA	1					
7	93306–00106	.COJINETE	2					
8	93102–12372	.SELLO ACEITE	1					
9	5VK–12438–00	.SELLO MECANICO	1					
10	4C8–12450–10	.EJE IMPULSOR COMPLETO	1					
11	4XV–12439–00	.ANILLO O	1					
12	93603–12007	.PASADOR DE CLAVIJA	2					
13	5VY–12422–00	.CUBIERTA DE CAJA	1					
14	90105–06065	.TORNILLO	5					
15	93603–17070	.PASADOR DE CLAVIJA	1					
16	5VY–13310–10	.ROTOR COMPLETO 1	1					
17	93603–12007	.PASADOR DE CLAVIJA	2					
18	5VY–13336–00	.CAJA DE ROTOR	1					
19	91312–06040	.TORNILLO	3					
20	5VY–13355–00	.CATALINA IMPULSADA	1					
21	90105–06066	.TORNILLO	1					
22	99009–12400	.PRESILLA REDONDA	1					
23	91808–30031	PASADOR DE CLAVIJA	1					
24	90110–06167	TORNILLO ALLEN	2					
25	93210–357A2	ANILLO O	1					
26	4XV–12485–00	TUBO 5	1					
27	93210–06667	ANILLO O	2					

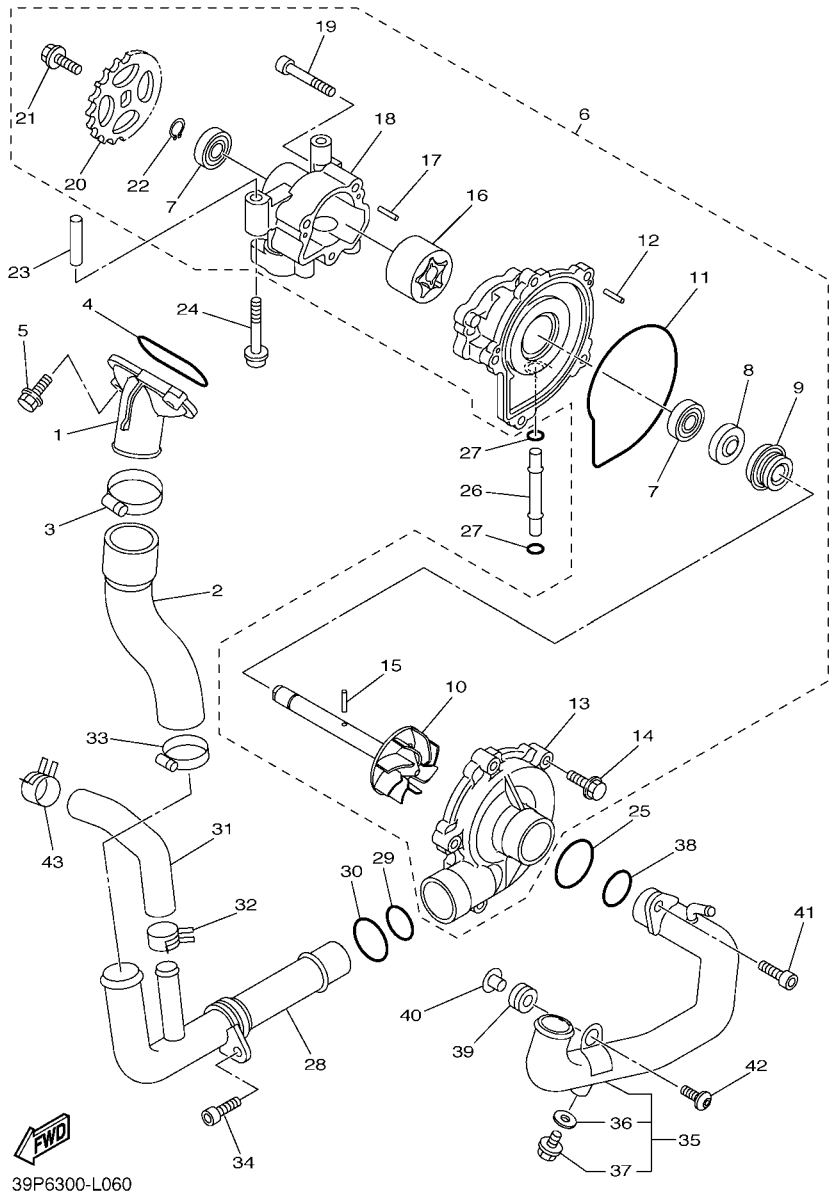

FIG. 6 BOMBA DE AGUA

REF. Nº	CODIGO Nº	DESCRIPCION	42PG					OBSERVACIONES
28	39P–12481–00	TUBO 1	1					
29	93210–235A1	ANILLO O	1					
30	93210–27370	ANILLO O	1					
31	5VY–12588–00	MANGUERA 5	1					
32	90467–200A0	PRESILLA	1					
33	90450–32006	BRIDA, MANGUERA	1					
34	90110–06161	TORNILLO ALLEN	1					
35	2D1–12484–01	TUBO 4	1					
36	90430–06014	.JUNTA	1					
37	90153–06002	.TORNILLO HEXAGONAL	1					
38	93210–235A1	ANILLO O	1					
39	90480–12010	TAPON	1					
40	90387–06112	ESPACIADOR	1					
41	90110–06161	TORNILLO ALLEN	1					
42	90149–06022	TORNILLO DE REGLAJE	1					
43	90467–200A0	PRESILLA	1					

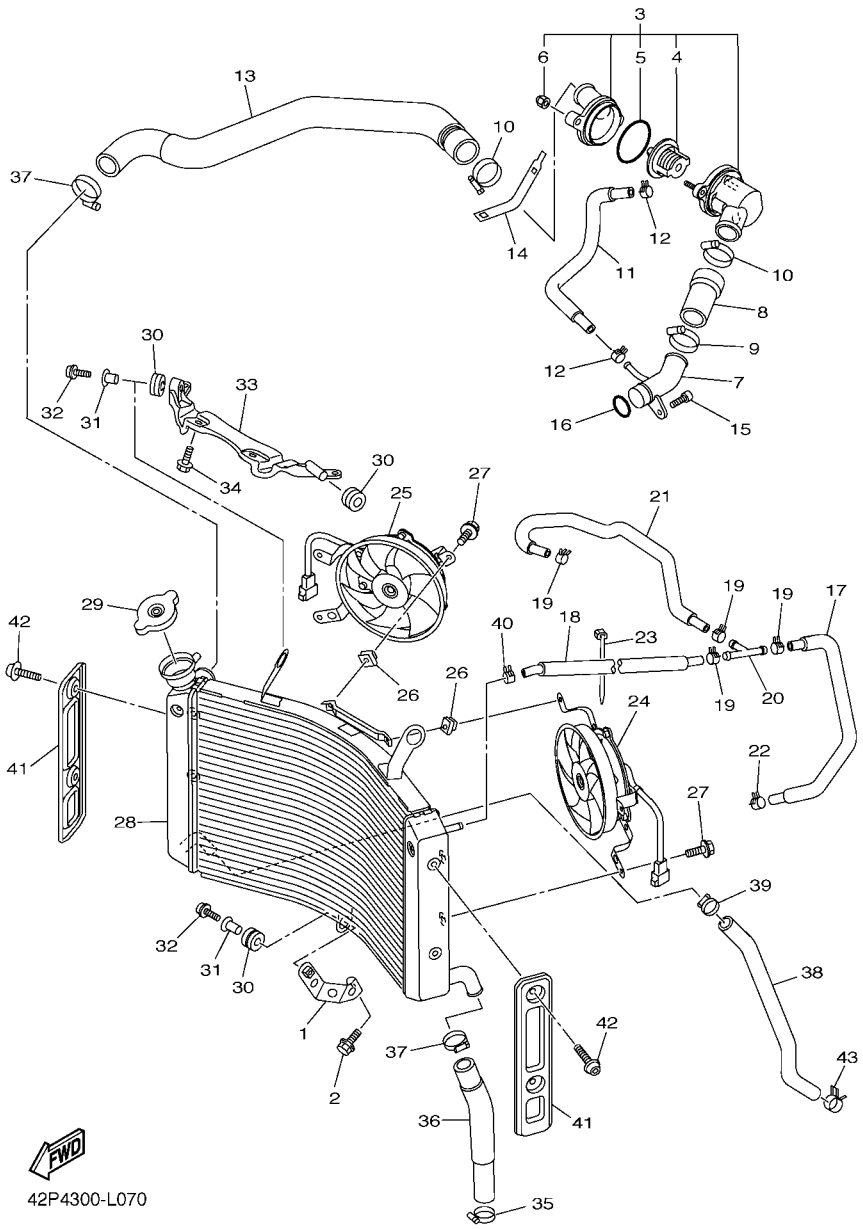

FIG. 7 RADIADOR & MANGUERA

REF. Nº	CODIGO Nº	DESCRIPCION	42PG					OBSERVACIONES
1	39P–12637–00	SOPORTE 1	1					
2	95024–06012	PERNO, BRIDA	1					
3	2D1–12410–00	TERMOSTATO CONJUNTO	1					
4	5LP–12411–00	.TERMOSTAT	1					
5	93210–49046	.ANILLO O	1					
6	90176–06014	.TUERCA CORONA	2					
7	5VY–12485–10	TUBO 5	1					
8	5VY–12579–00	MANGUERA 4	1					
9	90450–35001	BRIDA, MANGUERA	1					
10	90450–38040	BRIDA, MANGUERA	2					
11	39P–1243F–00	MANGUERA 3	1					
12	90467–11090	PRESILLA	2					
13	39P–12578–00	MANGUERA 3	1					
14	5GV–1246A–00	CUBIERTA 1	1					
15	90110–06161	TORNILLO ALLEN	1					
16	93210–235A1	ANILLO O	1					
17	5VY–1243A–00	TUBO 1	1					
18	2D1–1244G–00	MANGUERA 4	1					
19	90467–11090	PRESILLA	4					
20	90413–07023	UNION	1					
21	39P–1243E–00	TUBO 2	1					
22	90467–10039	PRESILLA	1					
23	90464–13073	BRIDA	1					
24	2D1–12405–01	COMPRESOR	1					
25	39P–12405–10	COMPRESOR	1					
26	1AA–12535–00	EMPAQUETADURA	2					
27	2D1–12675–00	PERNO, SUJECION VENTILADOR	6					

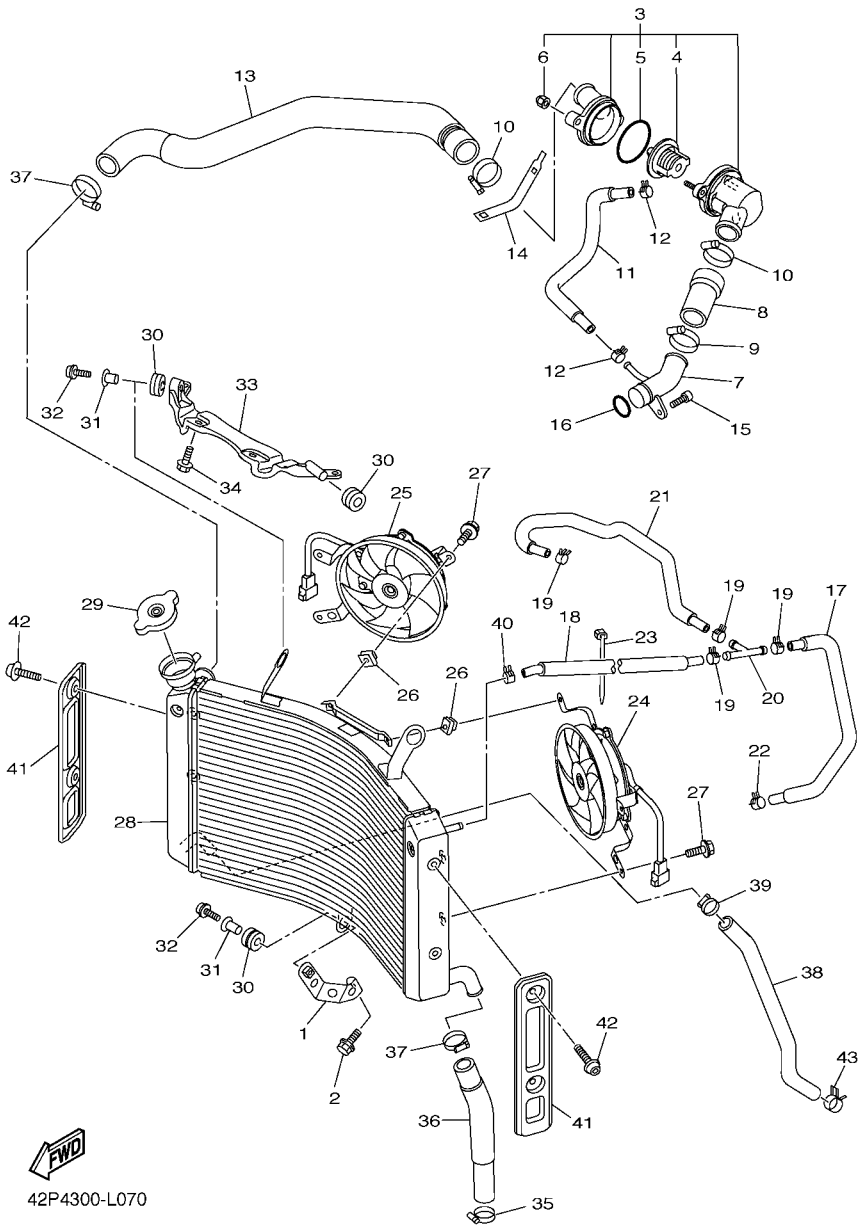

FIG. 7 RADIADOR & MANGUERA

REF. Nº	CODIGO Nº	DESCRIPCION	42PG					OBSERVACIONES
28	2D1–12461–00	RADIADOR COMPLETO	1					
29	22W–12462–00	TAPON, DEL RADIADOR	1					
30	90480–15363	TAPON	3					
31	90387–07391	ESPACIADOR	2					
32	90110–06172	TORNILLO ALLEN	2					
33	39P–12464–00	APOYO DE RADIADOR	1					
34	95802–06016	TORNILLO DE REBORDE	2					
35	90450–32001	BRIDA, MANGUERA	1					
36	2D1–12551–00	MANGUERA 7	1					
37	90450–32001	BRIDA, MANGUERA	2					
38	39P–12589–00	MANGUERA 6	1					
39	90450–22017	BRIDA, MANGUERA	1					
40	90467–11090	PRESILLA	1					
41	39P–1240J–00	CUBIERTA DE RADIADOR COMPLETO	2					
42	90111–06079	TORNILLO	4					
43	90467–200A0	PRESILLA	1					

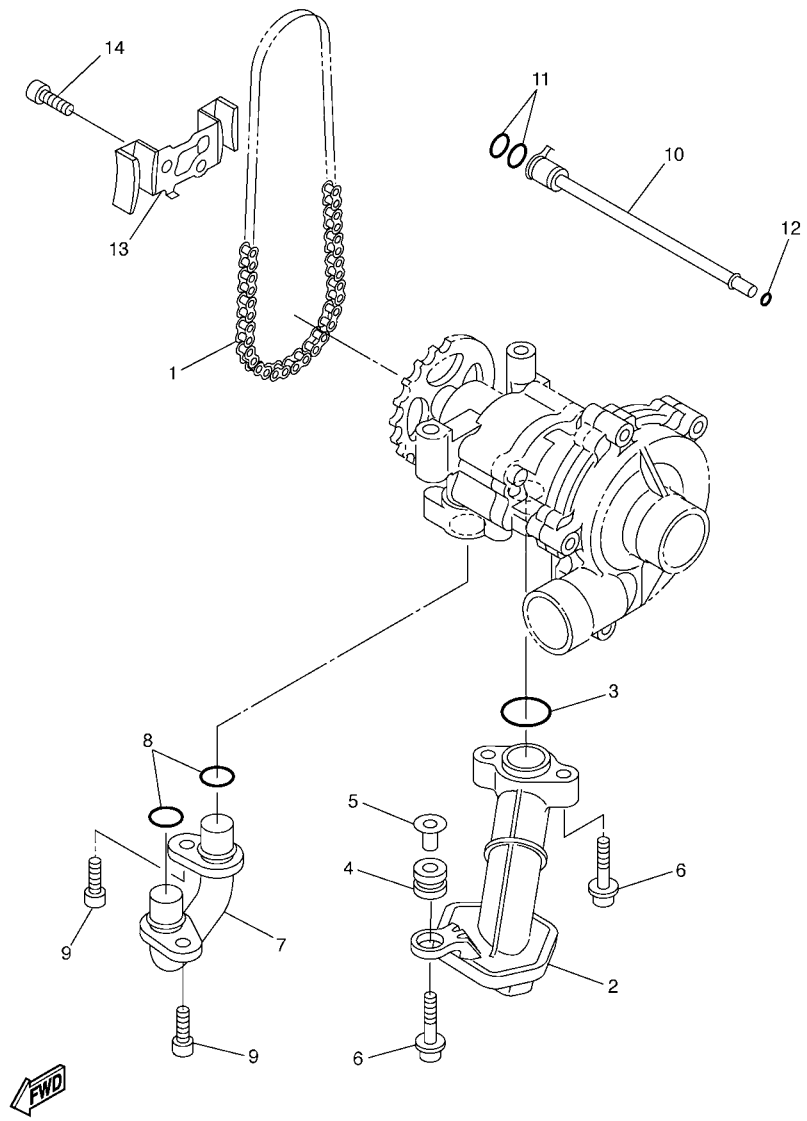

5VY1300-C080

FIG. 8 BOMBA DE ACEITE

REF. Nº	CODIGO Nº	DESCRIPCION	42PG					OBSERVACIONES
1	94580–25078	CADENA (DID25 78LE)	1					
2	5VY–13410–00	CAJA DE FILTRO COMPLETA	1					
3	93210–22298	ANILLO O	1					
4	90480–13010	TAPON	1					
5	5VY–13117–10	COLLAR, DISTANCIA	1					
6	90110–06173	TORNILLO ALLEN	3					
7	5VY–13416–00	TUBO DE ACEITE 1	1					
8	93210–14003	ANILLO O	2					
9	90110–06161	TORNILLO ALLEN	2					
10	5VY–1316E–00	TUBO, DE ENTREGA 5	1					
11	93210–09165	ANILLO O	2					
12	93210–06667	ANILLO O	1					
13	5VY–13898–00	SOSTEN	1					
14	90110–06182	TORNILLO ALLEN	2					

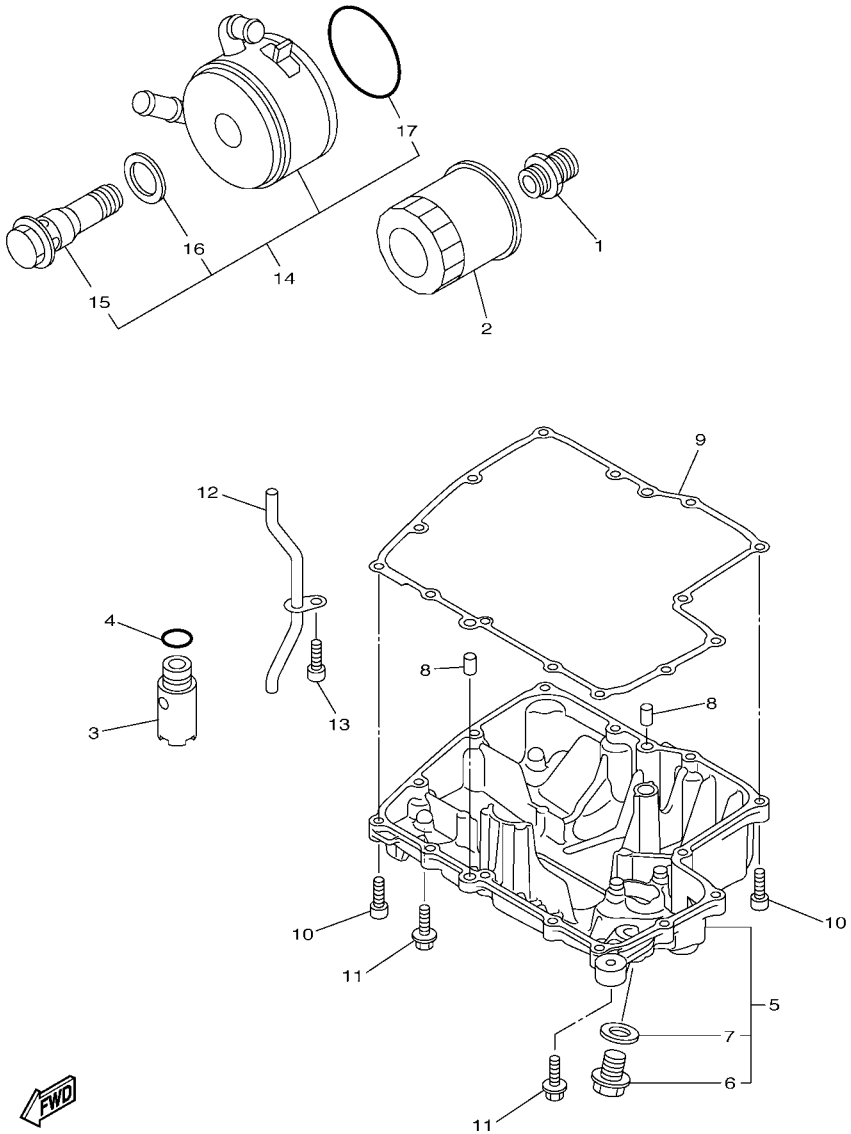

FIG. 9 FILTRO ACEITE

REF. Nº	CODIGO Nº	DESCRIPCION	42PG					OBSERVACIONES
1	90401–20008	PERNO DE UNION	1					
2	5GH–13440–50	ELEMENTO FILTRO DE ACEITE	1					
3	5VY–13490–00	VALVELA DE DESCOMPRESION	1					
4	93210–15566	ANILLO O	1					
5	39P–13400–00	CUBIERTA DE FILTRO COMPLETO	1					
6	90340–14132	.TORNILLO, DE DRENAJE	1					
7	214–11198–01	.EMPAQUE	1					
8	99530–08012	PASADOR, DE ESPIGA	2					
9	4C8–13414–00	EMPAQUE DE TAPA FILTRO	1					
10	91312–06025	TORNILLO	14					
11	95812–06010	TORNILLO DE REBORDE	4					
12	5VY–13161–00	TUBO CONDUCTOR 1	1					
13	90110–06161	TORNILLO ALLEN	1					
14	39P–13470–00	ENFRIADOR DE ACEITE COMPLETO	1					
15	5FL–12822–00	.PERNO DE UNION	1					
16	5EB–13475–00	.EMPAQUE	1					
17	5JW–13473–00	.ANILLO O	1					

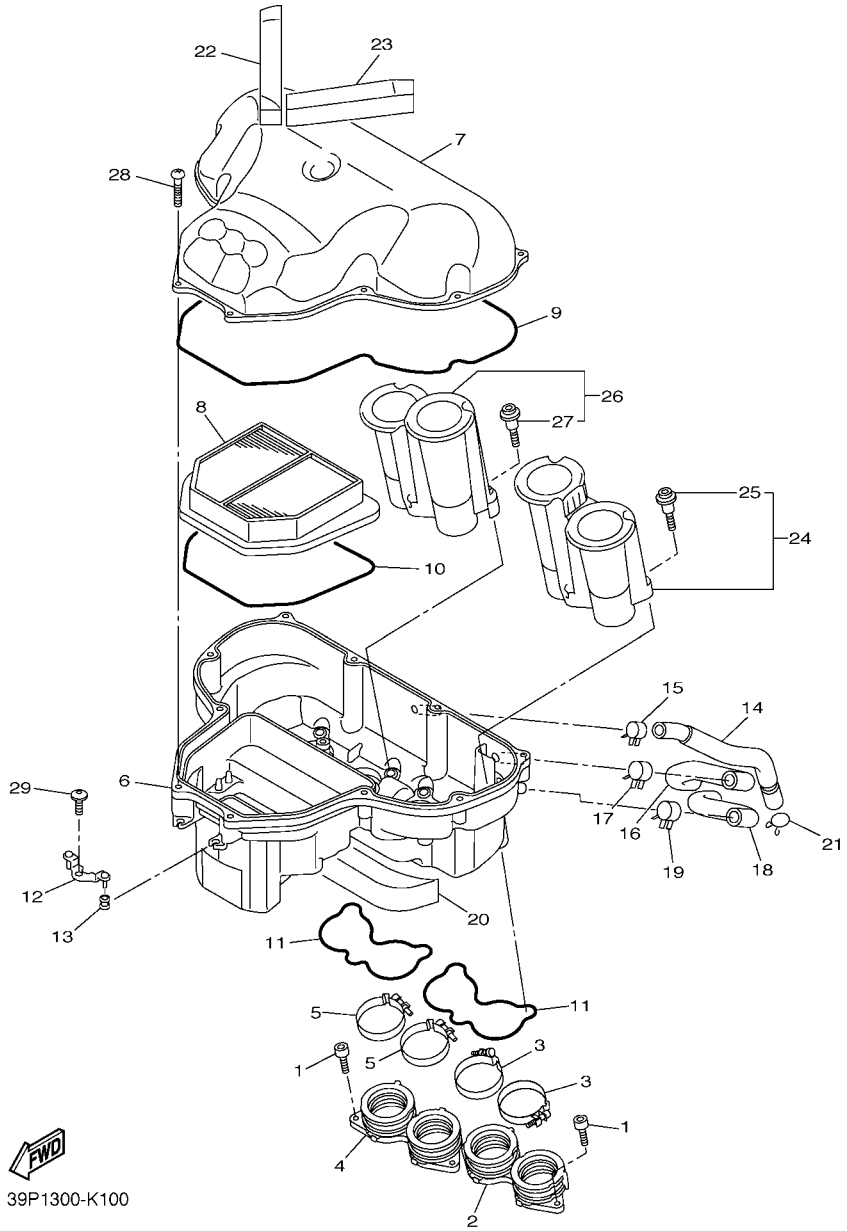

FIG. 10 ADMISION

REF. Nº	CODIGO Nº	DESCRIPCION	42PG					OBSERVACIONES
1	91312–06016	TORNILLO	6					
2	39P–13595–00	TOBERA	1					
3	90450–56007	BRIDA, MANGUERA	2					
4	39P–13596–00	TOBERA DE CARBURADOR 2	1					
5	90450–56007	BRIDA, MANGUERA	2					
6	39P–14411–00	CAJA FILTRO DEL AIRE 1	1					
7	39P–14421–00	CAJA FILTRO DEL AIRE 2	1					
8	2D1–14451–00	ELEMENTO DEL FILTRO DEL AIRE	1					
9	2D1–14452–00	SELLO	1					
10	2D1–14462–00	SELLO	1					
11	39P–14457–00	SELLO	2					
12	2D1–14498–00	SOPORTE 1	1					
13	90480–08264	TAPON	2					
14	39P–15393–00	TUBO, RESPIRADERO2	1					
15	90467–14171	PRESILLA	1					
16	39P–14148–00	TUBO	1					
17	90467–17003	PRESILLA	1					
18	39P–14149–00	TUBO	1					
19	90467–17003	PRESILLA	1					
20	2D1–14409–00	AMORTIGUADOR	1					
21	90467–14015	PRESILLA	1					
22	39P–14425–00	AMORTIGUADOR 1	1					
23	39P–14426–00	AMORTIGUADOR 2	1					
24	39P–1440B–00	UNION COMPLETO	1					
25	90109–05005	.PERNO	3					
26	39P–1440C–00	UNION COMPLETO 2	1					
27	90109–05005	.PERNO	3					

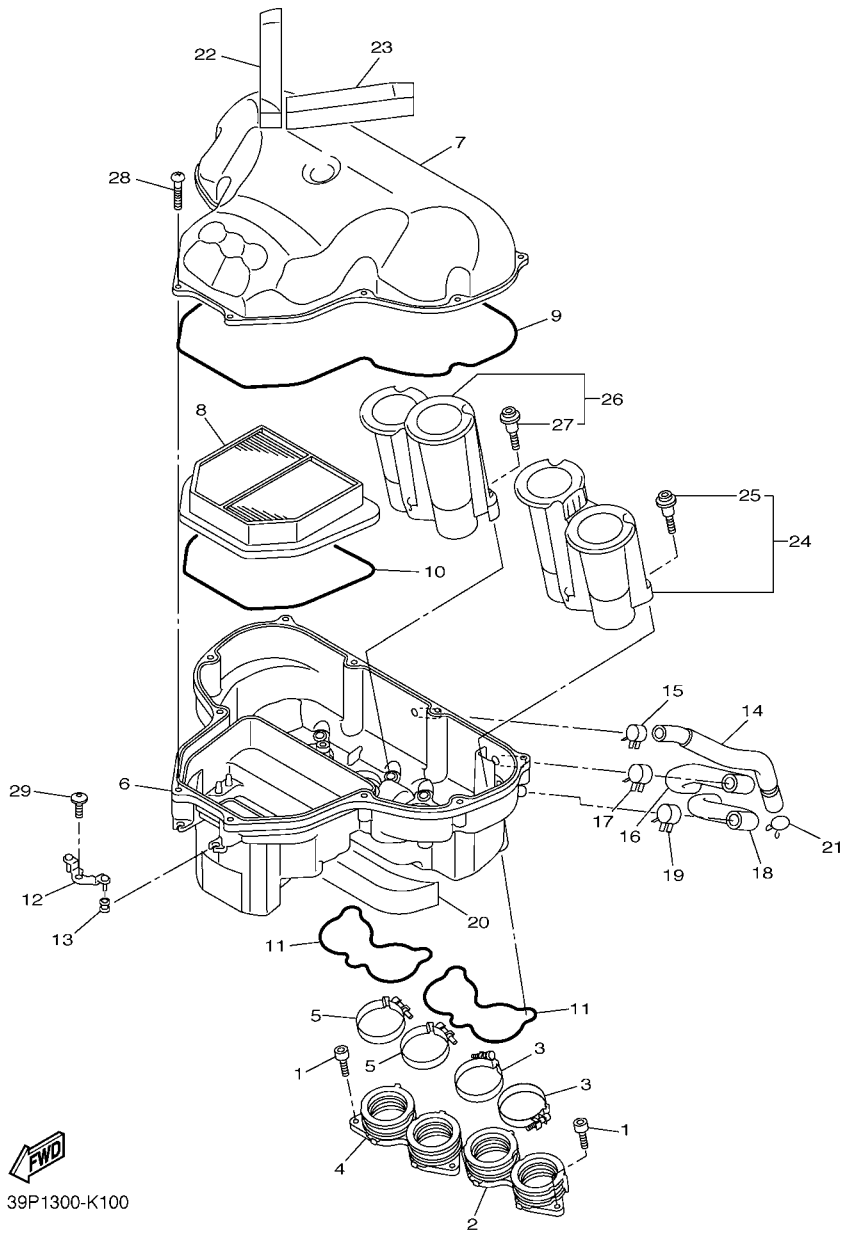

FIG. 10 ADMISION

REF. Nº	CODIGO Nº	DESCRIPCION	42PG					OBSERVACIONES
28	90160–05013	TORNILLO REDONDO ROSCA HEMBRA	11					
29	90111–06038	TORNILLO	1					

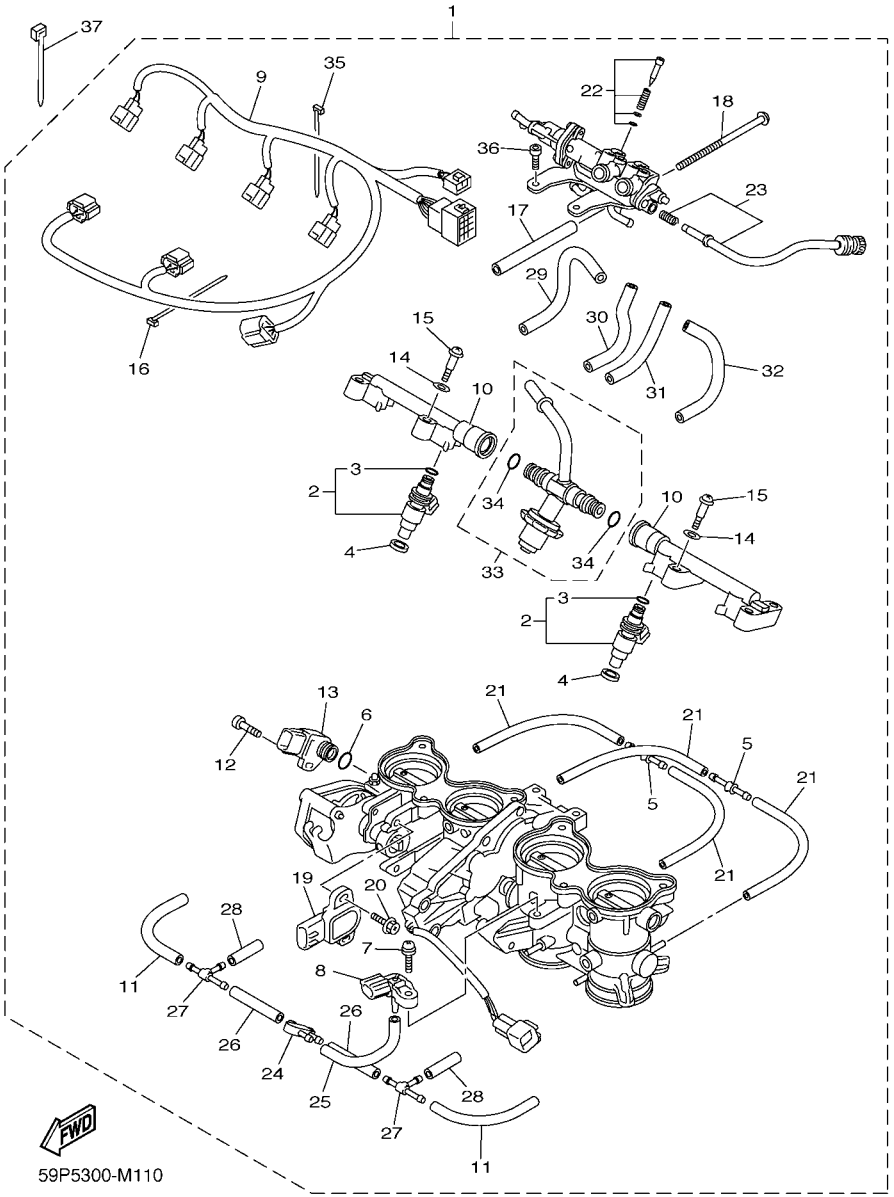

FIG. 11 ADMISION 2

REF. Nº	CODIGO Nº	DESCRIPCION	42PG					OBSERVACIONES
1	39P–13750–20	CAJA DE ACELERADOR COMPL.	1					
2	39P–13761–00	.INYECTOR	4					
3	5PS–14147–00	..ANILLO O	1					
4	8FP–13556–00	.ANILLO PROTECTOR	4					
5	5PW–14251–00	.NIPLE	2					
6	5YP–14561–00	.ANILLO O	1					
7	2C0–14216–00	.TORNILLO	1					
8	5S7–82380–00	.SENSOR DE PRESION	1					
9	39P–82386–10	.EXTENSION, ARNES DE CABLES	1					
10	39P–1393A–00	.TUBO	2					
11	69J–13532–00	.MANGUERA, DE VACIO 3	2					
12	8CC–14216–10	.TORNILLO	1					
13	5P0–H5885–00	.TERMICA SENSORIO	1					
14	363–14198–00	.EMPAQUE	4					
15	14B–13573–00	.PERNO 1	4					
16	39P–14137–00	.PRESILLA	1					
17	5VX–14149–00	.TUBO	1					
18	5VX–14565–00	.TORNILLO	1					
19	8GL–85885–00	.TERMICA SENSORIO	1					
20	5FL–14216–00	.TORNILLO	2					
21	5JW–14349–00	.TUBO	4					
22	5JW–14104–00	.CJTO. TORNNILLO DE AIRE	4					
23	39P–14503–00	.CARBURADOR COMPL.	1					
24	3XV–14251–00	.NIPLE	1					
25	5JW–14349–10	.TUBO	1					
26	8FP–14349–20	.TUBO	2					
27	68V–24376–00	.TUBO DE UNION 1	2					

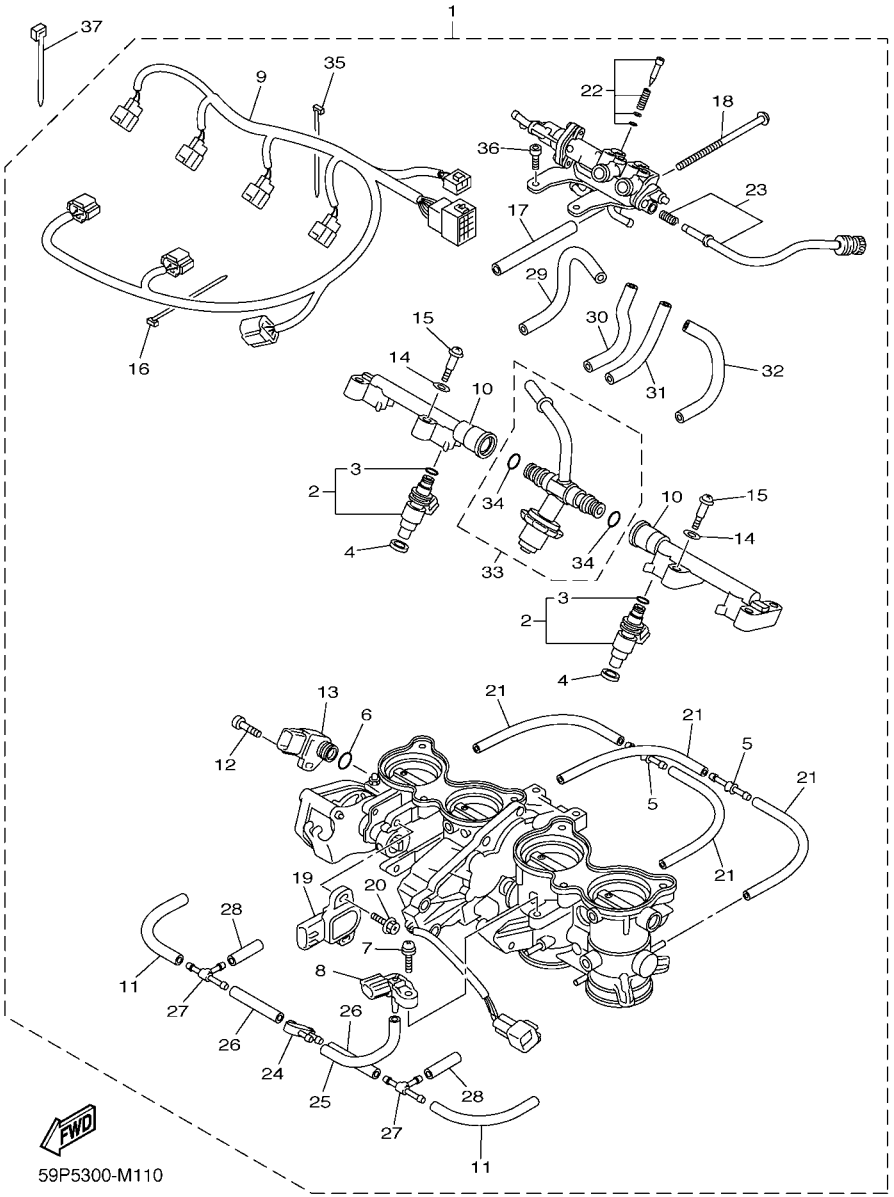

FIG. 11 ADMISION 2

REF. Nº	CODIGO Nº	DESCRIPCION	42PG					OBSERVACIONES
28	5FL–14348–10	.MANGUERA	2					
29	39P–14807–00	.TUBO COMPL.	1					
30	39P–14987–00	.TUBO	1					
31	31H–14987–00	.TUBO	1					
32	39P–14396–00	.TUBO	1					
33	39P–13795–00	.TOBERA UNION	1					
34	39P–14147–00	..ANILLO O	2					
35	90464–23003	.BRIDA	1					
36	39P–14592–00	.TORNILLO	2					
37	90465–13M11	BRIDA	1					

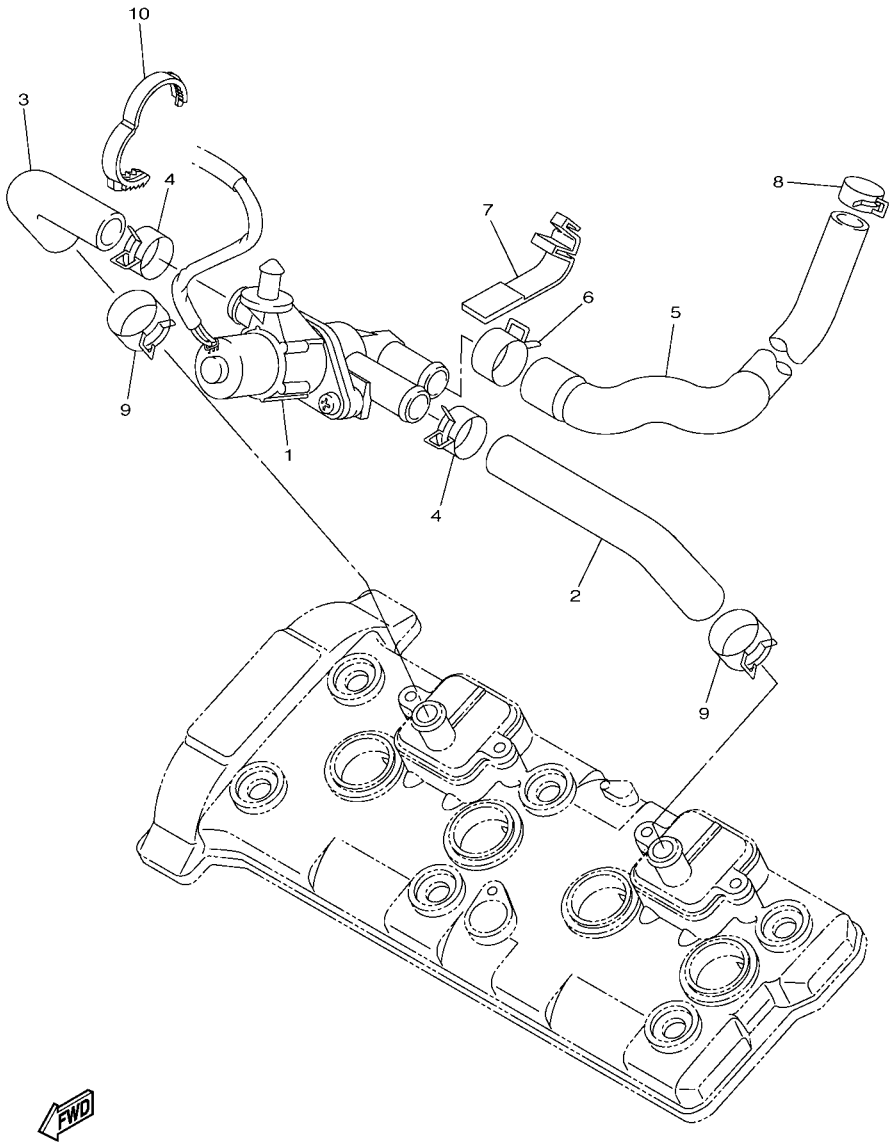

FIG. 12 SYSTEMA DE INDUCCION DE AIRE

REF. Nº	CODIGO Nº	DESCRIPCION	42PG					OBSERVACIONES
1	2D1–14840–00	VALVULA, CORTE DE AIRE	1					
2	5VY–14881–00	TUBO 1	1					
3	5VY–14882–00	TUBO 2	1					
4	90467–18172	PRESILLA	2					
5	39P–14883–00	TUBO 3	1					
6	90467–18172	PRESILLA	1					
7	5JW–14723–00	CUBIERTA	1					
8	90467–17128	PRESILLA	1					
9	90467–180A0	PRESILLA	2					
10	90464–26001	BRIDA	1					

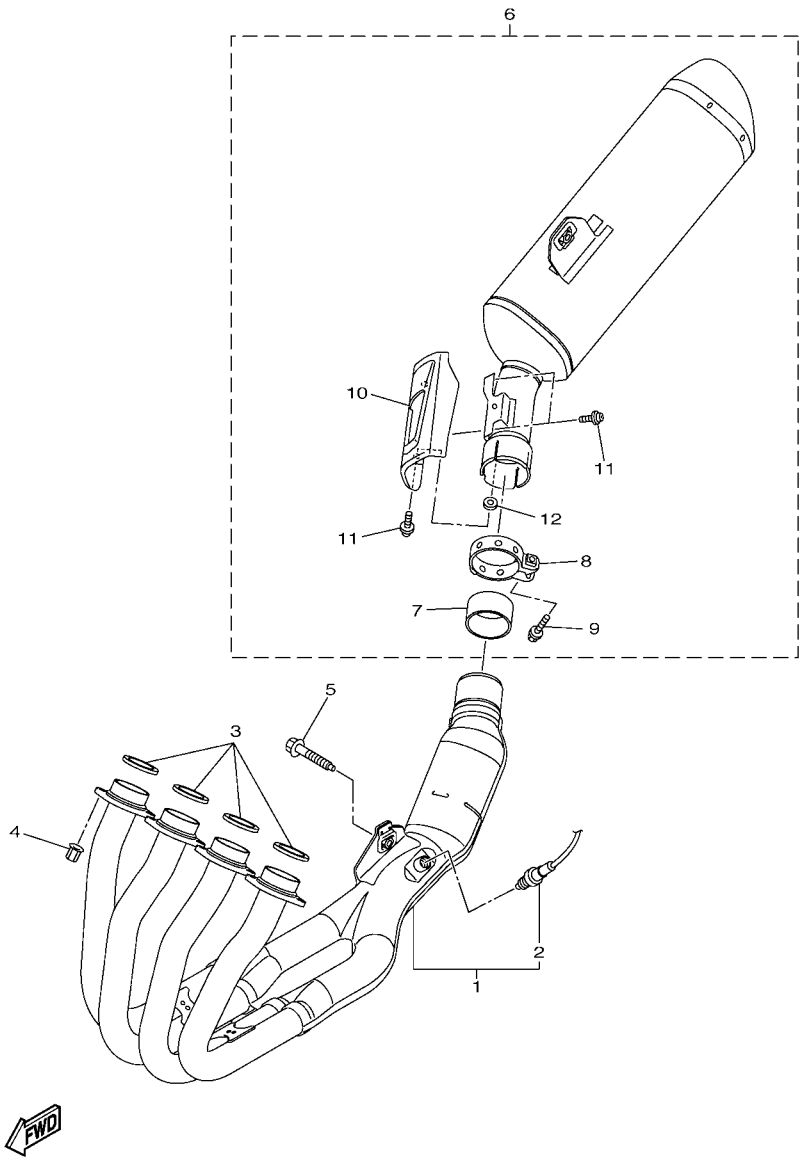

FIG. 13 DESCARGA

REF. Nº	CODIGO Nº	DESCRIPCION	42PG					OBSERVACIONES
1	39P–14610–10	TUBO DE ESCAPE COMPLETO 1	1					
2	39P–8592A–00	.SENSOR	1					
3	4FM–14613–00	JUNTA, TUBO DE ESCAPE	4					
4	90179–08410	TUERCA	8					
5	90109–08170	PERNO	1					
6	39P–14710–20	TUBO DE ESCAPE COMPLETO 1	1					
7	5YU–14714–10	.EMPAQUE DE SILENCIADOR	1					
8	39P–14715–00	.BANDA DE SILENCIADOR	1					
9	95024–08035	.PERNO, BRIDA	1					
10	39P–14718–20	.PROTECTOR DE SILENCIADOR 1	1					
11	90111–06060	.TORNILLO	4					
12	90201–05017	.ARANDELA PLANA	2					

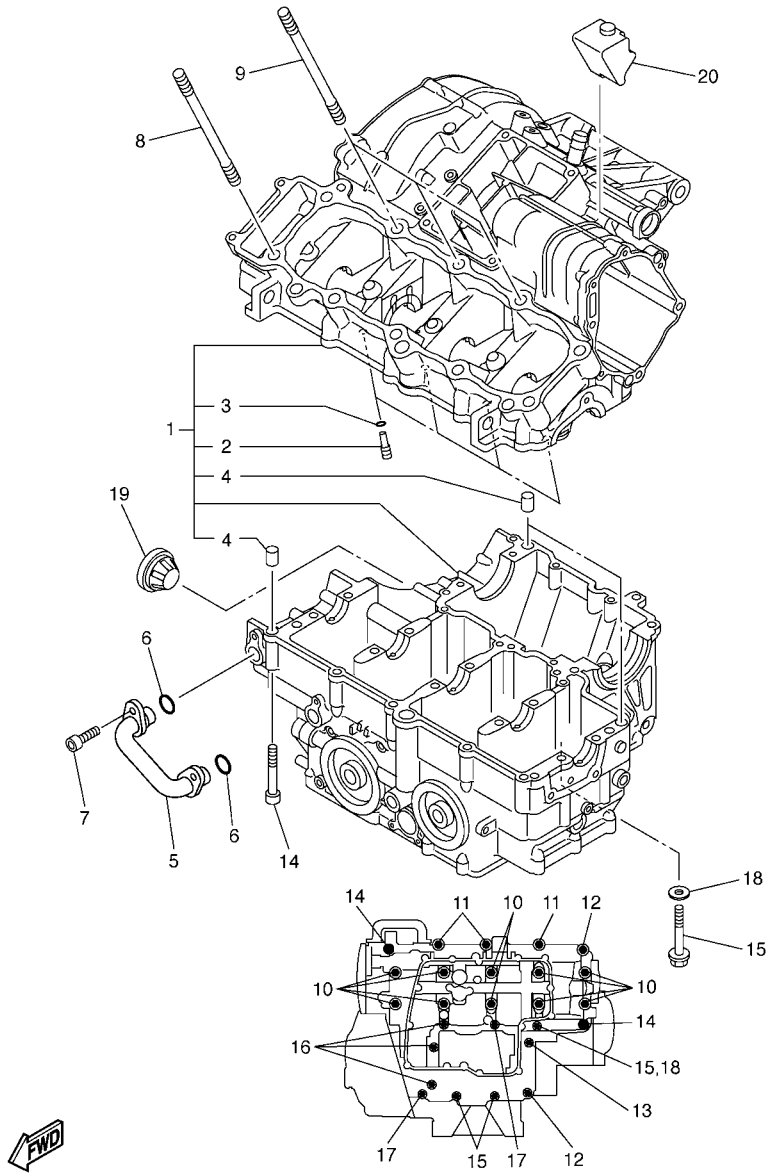

5VY1300-C140

FIG. 14 CARTER

REF. Nº	CODIGO Nº	DESCRIPCION	42PG					OBSERVACIONES
1	4C8–15100–10	CARTER COMPLETO	1					
2	5EB–15155–00	.BOQUILLA 3	4					
3	93210–04092	.ANILLO O	4					
4	99530–10014	.PASADOR, DE ESPIGA	3					
5	39P–13418–00	TUBO DE ACEITE 2	1					
6	93210–14003	ANILLO O	2					
7	90110–06161	TORNILLO ALLEN	2					
8	90116–10032	ESPARRAGO	7					
9	90116–10023	ESPARRAGO	3					
10	90119–09012	TORNILLO CON ARANDELA	10					
11	95812–08050	TORNILLO DE REBORDE	3					
12	95812–08060	TORNILLO DE REBORDE	2					
13	90105–08101	TORNILLO	1					
14	90109–06100	PERNO	2					
15	95812–06060	TORNILLO DE REBORDE	3					
16	95812–06070	TORNILLO DE REBORDE	3					
17	95812–06050	TORNILLO DE REBORDE	2					
18	90430–06166	JUNTA	1					
19	5PW–15361–00	MEDIDOR DE NIVEL	1					
20	5VY–15316–00	AMORTIGUADOR 1	1					

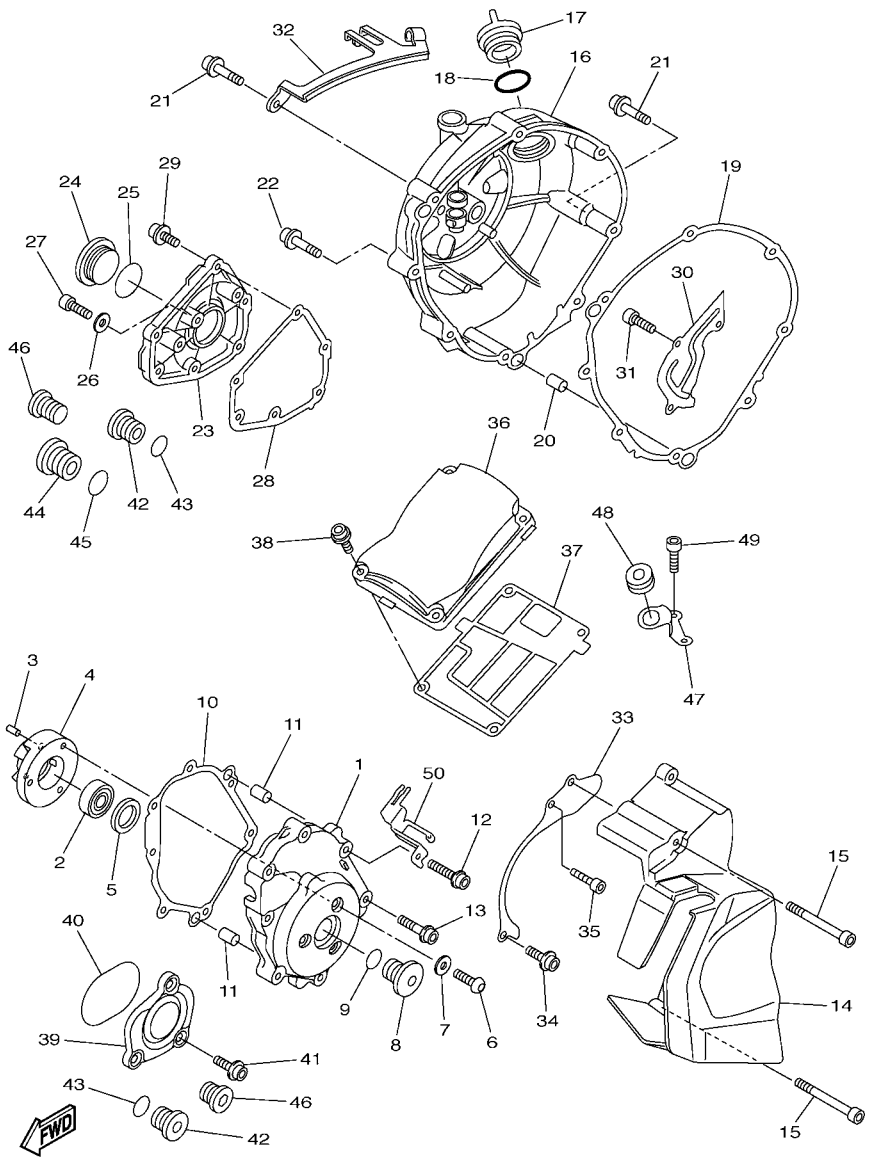

FIG. 15 CUBIERTA DE CARTER 1

REF. Nº	CODIGO Nº	DESCRIPCION	42PG					OBSERVACIONES
1	5VY–15411–00	CUBIERTA DE CARTER 1	1					
2	93306–20124	COJINETE	1					
3	93605–10108	PASADOR DE CLAVIJA	2					
4	5VY–15164–00	CAJA DE COJINETE 2	1					
5	5VY–15542–00	COLLAR 2	1					
6	90149–06064	TORNILLO DE REGLAJE	3					
7	90201–06431	ARANDELA PLANA	3					
8	5PX–15189–00	TAPON	1					
9	93210–22382	ANILLO O	1					
10	2D1–15451–10	EMPAQ DE CUBIERTA DE CARTER	1					
11	99480–10018	PASADOR	2					
12	90110–06388	TORNILLO ALLEN	4					
13	90110–08099	TORNILLO ALLEN	3					
14	2D1–15418–00	CUBIERTA CAJA DE CADENA	1					
15	90110–06255	TORNILLO ALLEN	3					
16	2D1–15421–00	TAPA DE CARTER DERECHA	1					
17	3F9–15362–10	TAPON DEL NIVEL DE ACEITE	1					
18	93210–27194	ANILLO O	1					
19	4C8–15461–00	JUNTA TAPA CARTER DERECHO 2	1					
20	93610–20189	PASADOR DE CLAVIJA	2					
21	90110–06321	TORNILLO ALLEN	6					
22	90110–06320	TORNILLO ALLEN	2					
23	2D1–15416–00	CUBIERTA DE BOMBA DE ACEITE	1					
24	90340–32004	TORNILLO, DE DRENAJE	1					
25	93210–32172	ANILLO O	1					
26	90430–08143	JUNTA	1					
27	92014–08012	PERNO	1					

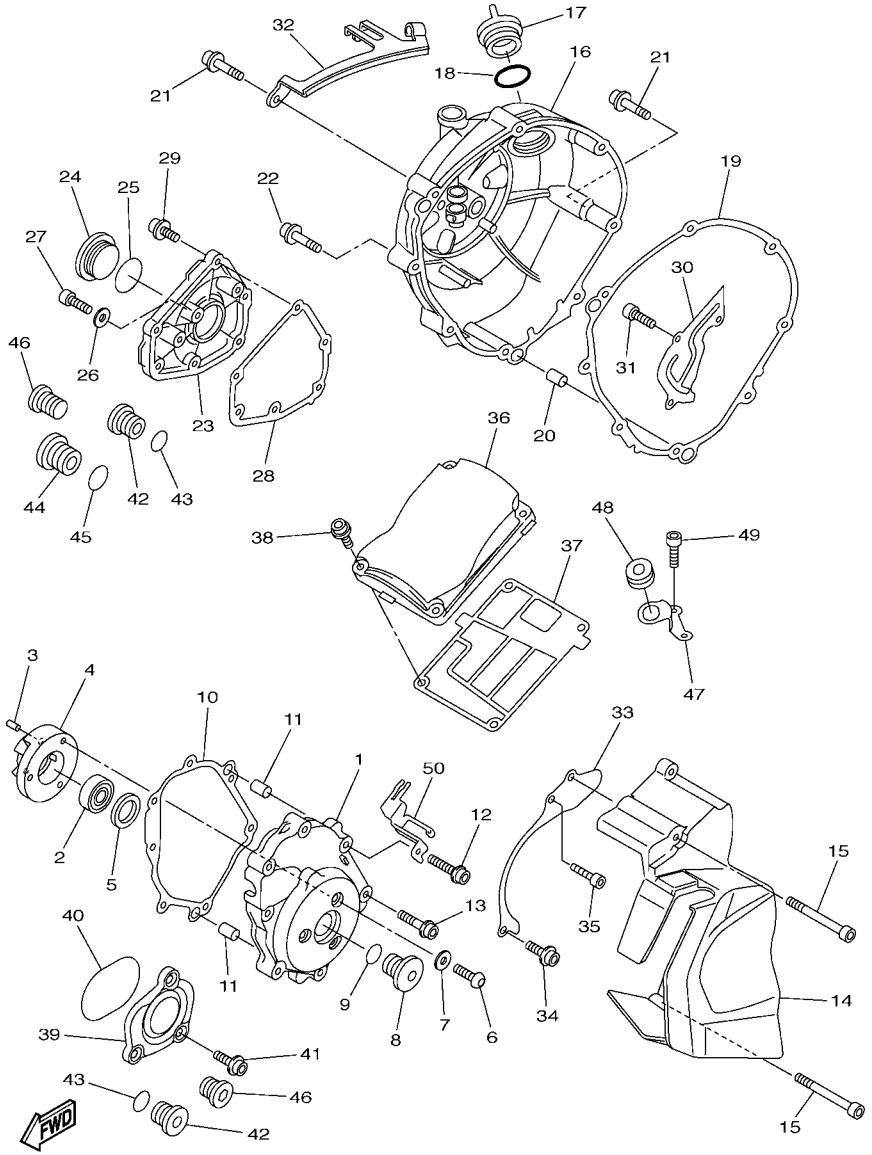

FIG. 15 CUBIERTA DE CARTER 1

REF. Nº	CODIGO Nº	DESCRIPCION	42PG					OBSERVACIONES
28	4C8–15456–00	EMPAQ CUBTA.BOMBA ACEITE 1	1					
29	90110–06396	TORNILLO ALLEN	6					
30	5VY–11165–00	PLACA RESPIRADERO	1					
31	90110–06182	TORNILLO ALLEN	3					
32	39P–15441–00	SOSTEN DE CABLE DE EMBRAGUE	1					
33	39P–15113–00	PLACA	1					
34	90110–06277	TORNILLO ALLEN	1					
35	90110–06276	TORNILLO ALLEN	1					
36	2D1–15413–10	CUBIERTA	1					
37	4C8–15462–00	EMPAQ CUBIERTA DE CARTER 3	1					
38	90110–06349	TORNILLO ALLEN	4					
39	4C8–15431–00	CUBIERTA DE CARTER 3	1					
40	93210–57003	ANILLO O	1					
41	90110–06396	TORNILLO ALLEN	3					
42	36Y–15189–00	TAPON	3					
43	93210–16325	ANILLO O	3					
44	4H7–15189–00	TAPON	1					
45	93210–22382	ANILLO O	1					
46	90340–12003	TORNILLO, DE DRENAJE	2					
47	5VY–12443–10	APOYO	1					
48	90480–13014	TAPON	1					
49	91380–06014	PERNO	2					
50	39P–14413–00	SOPORTE	1					

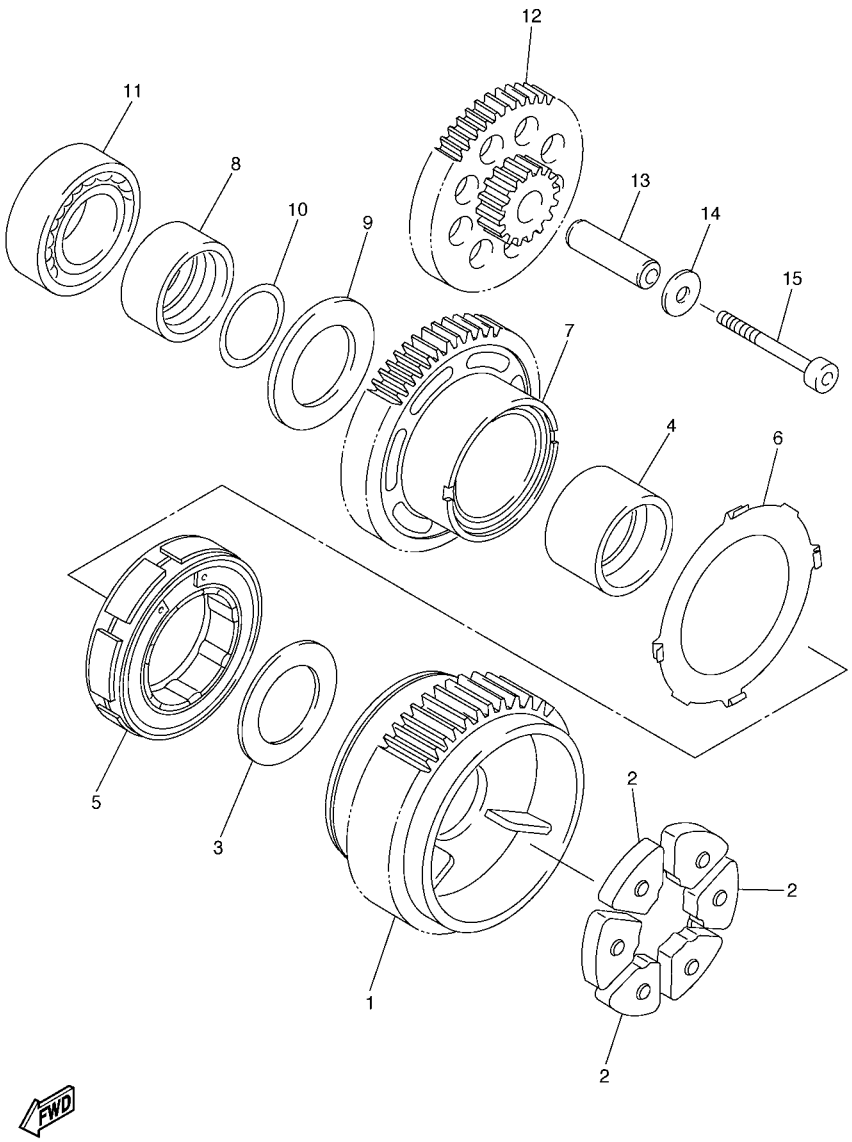

FIG. 16 ARRANQUE

REF. Nº	CODIGO Nº	DESCRIPCION	42PG					OBSERVACIONES
1	2D1–11537–10	ENGRANAJE TRACCION	1					
2	5VY–16155–00	AMORTIGUADOR 1	3					
3	90201–20016	ARANDELA PLANA	1					
4	5VY–11478–00	COLLAR	1					
5	5VY–15570–00	EMBRAGUE DEL ARRANQUE COMPLETA	1					
6	5VY–15586–00	PLACA	1					
7	5VY–15515–00	ENGRANAJE 3	1					
8	5VY–11445–00	ESPACIADOR	1					
9	90201–20017	ARANDELA PLANA	1					
10	93210–18397	ANILLO O	1					
11	93306–20230	COJINETE	1					
12	5VY–15517–00	ENGRENAJE POSICION 2DA	1					
13	5VY–15521–00	EJE 1	1					
14	90201–06589	ARANDELA PLANA	1					
15	90110–06176	TORNILLO ALLEN	1					

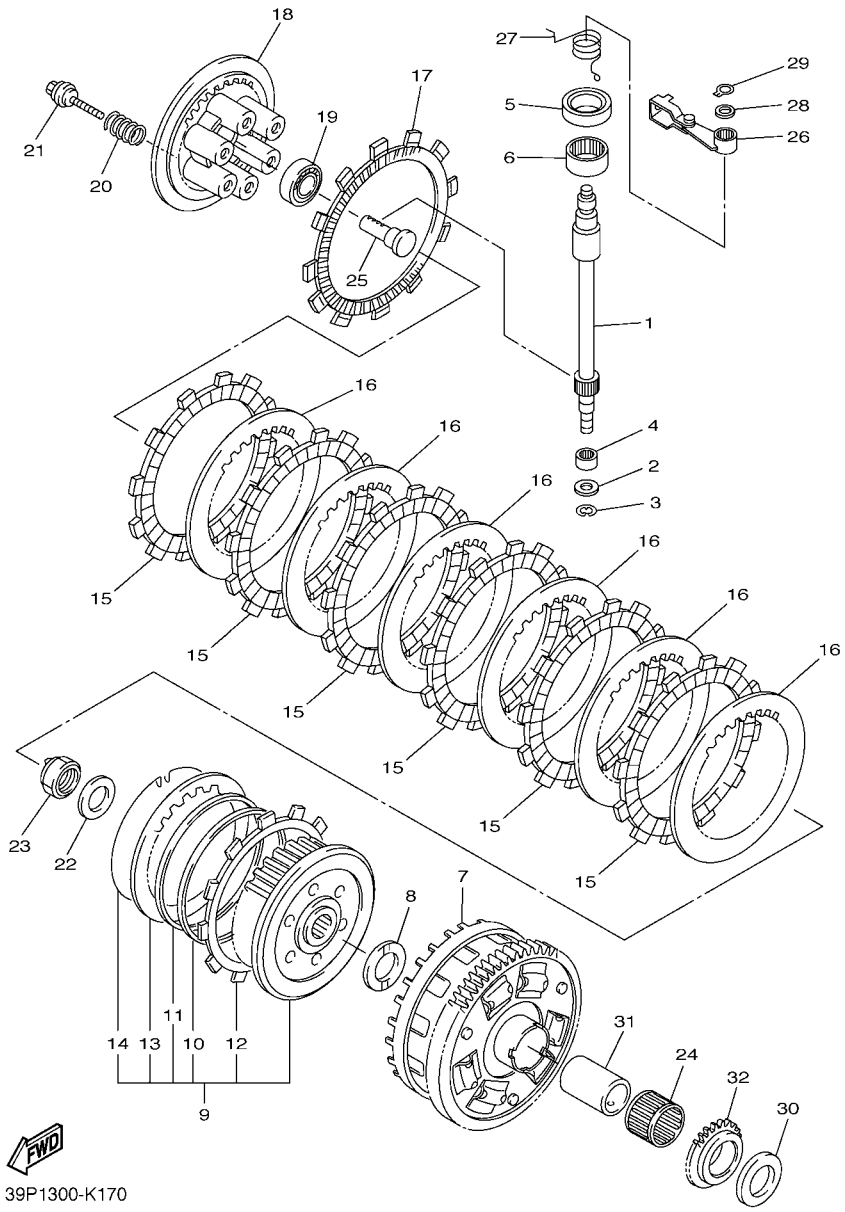

FIG. 17 EMBRAGUE

REF. Nº	CODIGO Nº	DESCRIPCION	42PG					OBSERVACIONES
1	2D1–16382–00	EJE DE PALANCA DE EMPUJE	1					
2	92907–08600	ARANDELA	1					
3	99001–07600	PRESILLA REDONDA	1					
4	93317–11096	COJINETE	1					
5	93102–15212	SELLO ACEITE	1					
6	93315–31502	COJINETE DE RODILLOS	1					
7	5VY–16150–00	CAMPANA DE EMBRAGUE	1					
8	5VY–16154–00	ARANDELA, DE EMPUJE 1	1					
9	39P–16370–01	COPA DE EMBRAGUE COMPLETA	1					
10	5VY–16384–00	.PLACA DE ASIENTO	1					
11	5VY–16383–00	.RESORTE.,COJIN	1					
12	5VY–16331–00	.DISCO, DE FRICCION 2	1					
13	5VY–16325–00	.DISCO, DE EMBRAGUE	1					
14	4X7–16385–00	.SET OF ANILLO	1					
15	5VY–16321–00	PLACA DE FRICCION	6					
16	5VY–16325–00	DISCO, DE EMBRAGUE	6					
17	5VY–16330–00	PLACA DE FRICCION 2	1					
18	5VY–16351–00	PLATO DE PRESION	1					
19	93306–00304	COJINETE	1					
20	90501–230A0	RESORTE DE COMPRESION	6					
21	90119–06257	TORNILLO CON ARANDELA	6					
22	90208–20001	ARANDELA DE RESORTE CONICO	1					
23	90179–20007	TUERCA	1					
24	93310–232R9	COJINETE DE RODILLOS	1					
25	4XV–16356–01	VARILLA DE EMPUJE 1	1					
26	5VY–16340–00	PALANCA DE EMPUJE COMPLETA	1					
27	90508–18051	RESORTE DE TORSION	1					

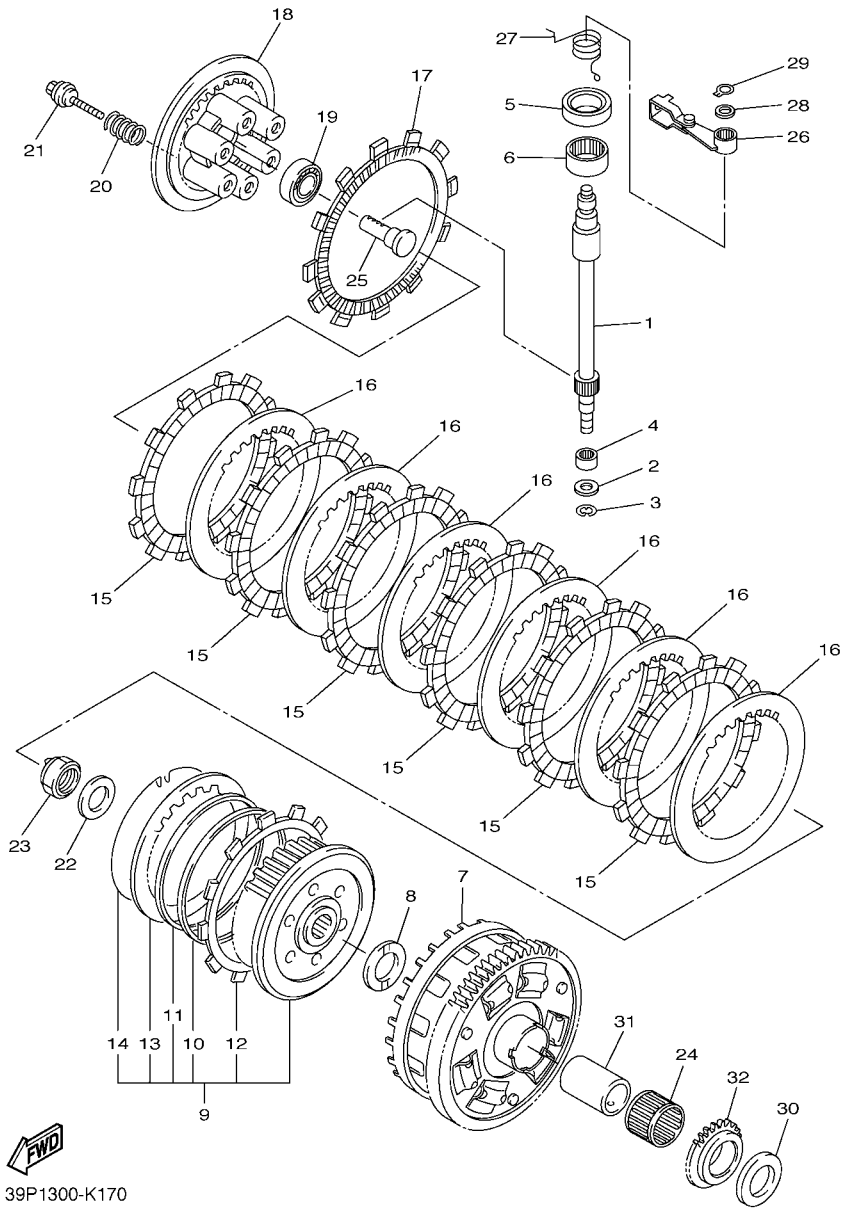

FIG. 17 EMBRAGUE

REF. Nº	CODIGO Nº	DESCRIPCION	42PG					OBSERVACIONES
28	90201–10029	ARANDELA PLANA	1					
29	99009–10400	PRESILLA REDONDA	1					
30	5VY–16164–00	PLACA DE EMPUJE 2	1					
31	5VY–16181–00	SEPARADOR	1					
32	5VY–13354–00	CATALINA	1					

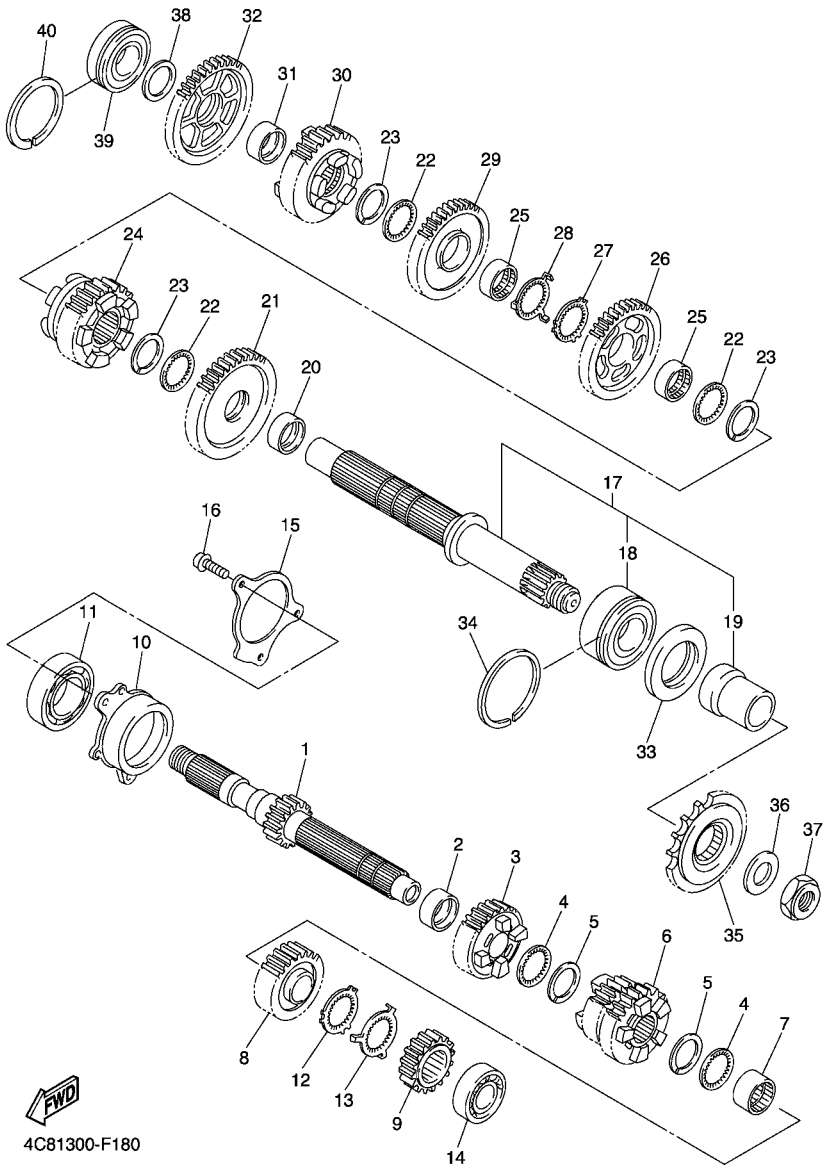

FIG. 18 TRANSMISION

REF. Nº	CODIGO Nº	DESCRIPCION	42PG					OBSERVACIONES
1	39P–17411–00	EJE PRIMARIO (13T)	1					
2	90387–28003	ESPACIADOR	1					
3	39P–17151–00	ENGRANAJE PINON DE 5TA (20T)	1					
4	90209–25011	ARANDELA DE SEPARACION	2					
5	93440–28184	SEGURO	2					
6	39P–17131–00	ENGRANAJE PINON DE 3RA(21/23T)	1					
7	90387–25007	ESPACIADOR	1					
8	39P–17161–00	ENGRANAJE PINON 6TA (24T)	1					
9	39P–17121–00	ENGRANAJE DE PINON DE 2DA(16T)	1					
10	5VY–15163–00	CAJA DE COJINETE 1	1					
11	93306–20652	COJINETE	1					
12	90214–25004	ARANDELA DE POSICION	1					
13	90214–25003	ARANDELA DE POSICION	1					
14	93306–27209	COJINETE	1					
15	5VY–17446–00	PLACA	1					
16	90110–06164	TORNILLO ALLEN	3					
17	4C8–17402–00	EJE DE TRACCION COMPLETO	1					
18	93305–20605	.COJINETE	1					
19	5VY–17442–00	.COLLAR DISTANCIADOR	1					
20	90387–31003	ESPACIADOR	1					
21	39P–17221–00	ENGRANAJE RUEDA DE 2DA (33T)	1					
22	90209–28008	ARANDELA DE SEPARACION	3					
23	93440–31187	SEGURO	3					
24	39P–17261–00	ENGRANAJE DE RUEDA 6TA (29T)	1					
25	90387–28004	ESPACIADOR	2					
26	39P–17241–00	ENGRANAJE DE RUEDA 4TA (35T)	1					
27	90214–29002	ARANDELA DE POSICION	1					

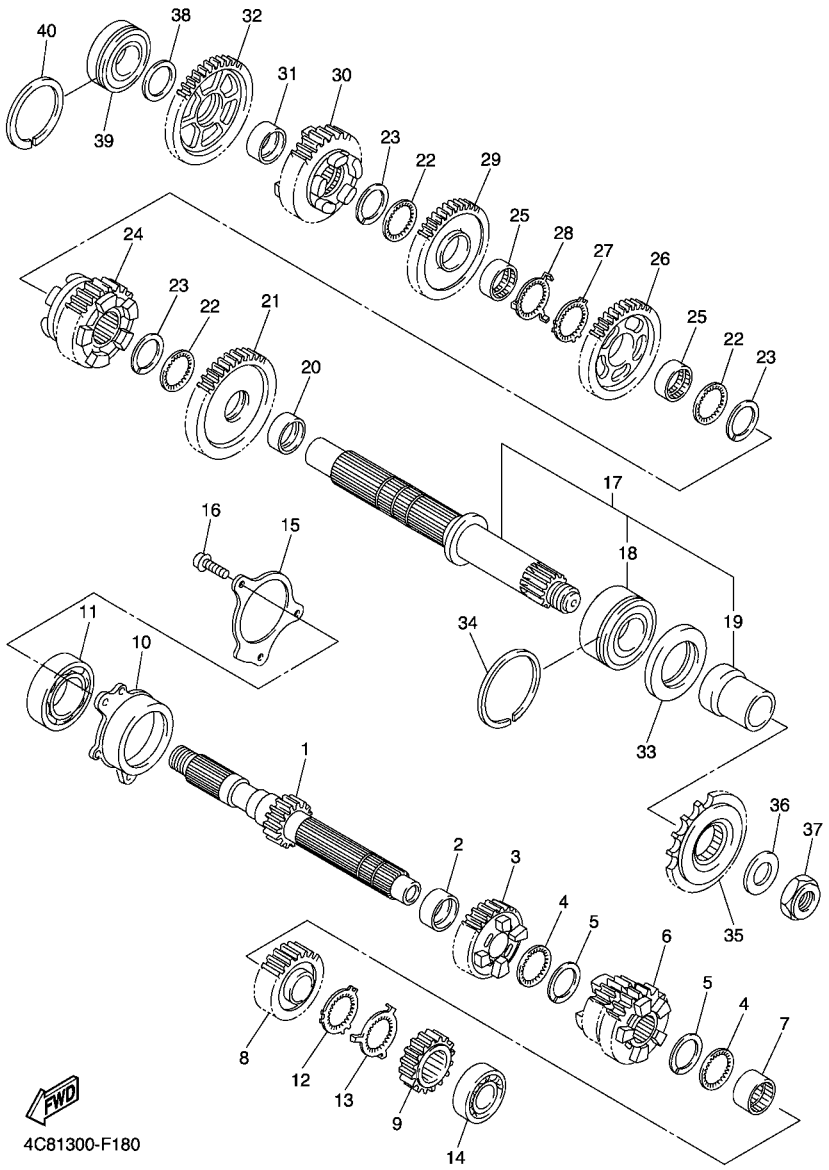

FIG. 18 TRANSMISION

REF. Nº	CODIGO Nº	DESCRIPCION	42PG					OBSERVACIONES
28	90214–28002	ARANDELA DE POSICION	1					
29	5VY–17231–00	ENGRANAJE RUEDA DE 3RA (37T)	1					
30	39P–17251–00	ENGRANAJE DE RUEDA 5TA (27T)	1					
31	90387–25008	ESPACIADOR	1					
32	39P–17211–00	ENGRANAJE RUEDA DE 1RA (35T)	1					
33	93102–40330	SELLO ACEITE	1					
34	93440–62032	SEGURO	1					
35	5PS–17460–00	CORONA (16T)	1					
36	90201–22015	ARANDELA PLANA	1					
37	90179–22019	TUERCA	1					
38	90201–257H0	ARANDELA PLANA	1					
39	93306–205A2	COJINETE	1					
40	93440–52009	SEGURO	1					

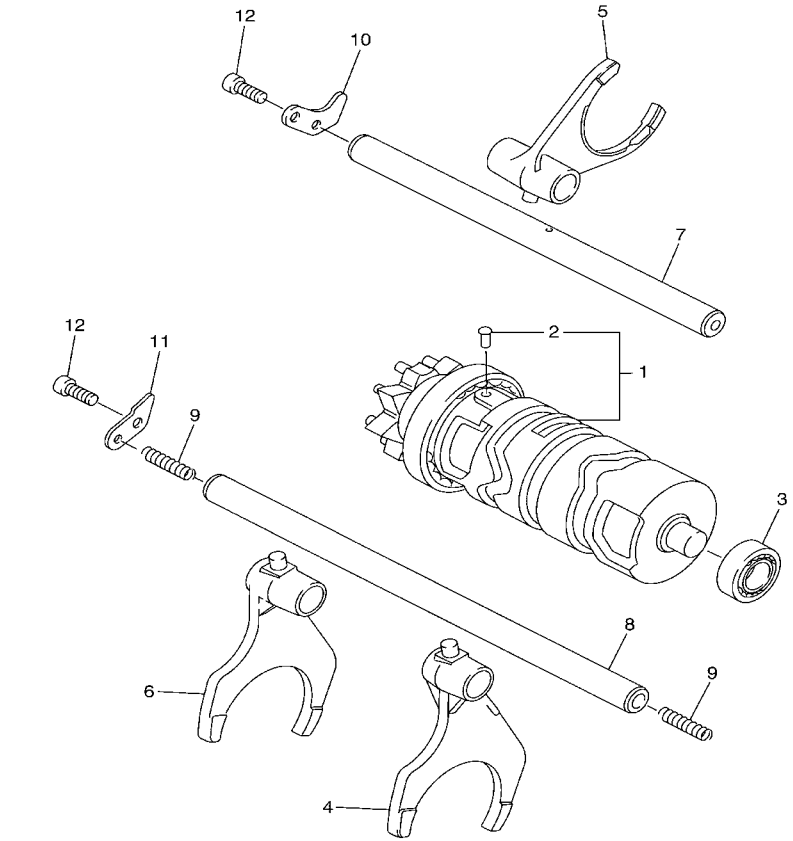

FIG. 19 LEVA DE CAMBIO & HORQUILLA

REF. Nº	CODIGO Nº	DESCRIPCION	42PG					OBSERVACIONES
1	5VY–18540–00	LEVA DEL CAMBIO COMPLETA	1					
2	136–18542–00	.PUNTO MUERTO	1					
3	93306–00106	COJINETE	1					
4	2D1–18511–00	HORQUILLA DEL CAMBIO 1	1					
5	39P–18512–00	HORQUILLA DEL CAMBIO 2	1					
6	5VY–18513–01	HORQUILLA DEL CAMBIO 3	1					
7	5VY–18531–00	BARRA GUIA HORQ. CAMBIO 1	1					
8	5VY–18535–00	BARRA GUIA HORQ .CAMBIO 2	1					
9	90501–064L1	RESORTE DE COMPRESION	2					
10	5VY–18536–00	TOPE DE PALANCA SELECTOR	1					
11	5VY–18562–00	PLACA DE TOPE 2	1					
12	90110–06182	TORNILLO ALLEN	2					

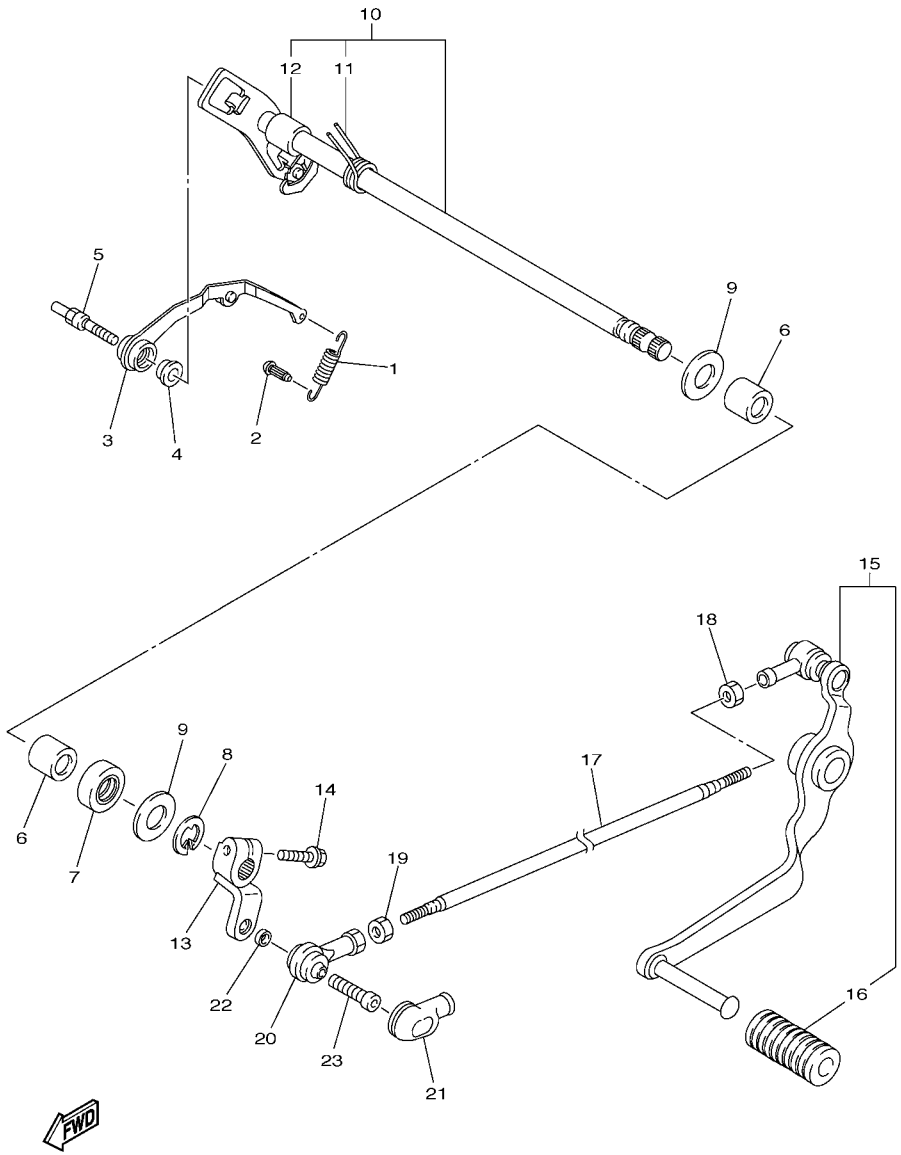

FIG. 20 EJE DE CAMBIO & PEDAL

REF. Nº	CODIGO Nº	DESCRIPCION	42PG					OBSERVACIONES
1	5VY–18144–00	GANCHO DE RESORTE	1					
2	132–16346–00	GANCHO DE RESORTE	1					
3	5VY–18140–00	PALANCA DE TOPE COMPLETA	1					
4	90387–0804S	ESPACIADOR	1					
5	5VY–18127–10	PASADOR DE PALANCA	1					
6	93317–11295	COJINETE	2					
7	93102–12106	SELLO ACEITE (SD 12-22-5 HS)	1					
8	99002–10600	PRESILLA REDONDA	1					
9	90201–12575	ARANDELA PLANA	2					
10	2D1–18101–01	EJE SELECTOR COMPLETO	1					
11	90508–32141	.RESORTE DE TORSION	1					
12	90387–1211D	.ESPACIADOR	1					
13	39P–18112–00	BRAZO DEL CAMBIO	1					
14	95022–06020	PERNO, DE BRIDA	1					
15	39P–18110–00	PEDAL DE CAMBIO COMPLETO	1					
16	5EB–18113–00	.FUNDA DEL PEDAL DEL CAMBIO	1					
17	39P–18115–00	VARILLA DEL CAMBIO	1					
18	90170–06228	TUERCA	1					
19	95304–06700	TUERCA	1					
20	5VX–18116–00	VARILLA DE CONECTOR 1	1					
21	5VX–18154–00	CUBIERTA GUARDAPOLVO	1					
22	90387–06022	ESPACIADOR	1					
23	90111–06098	TORNILLO	1					

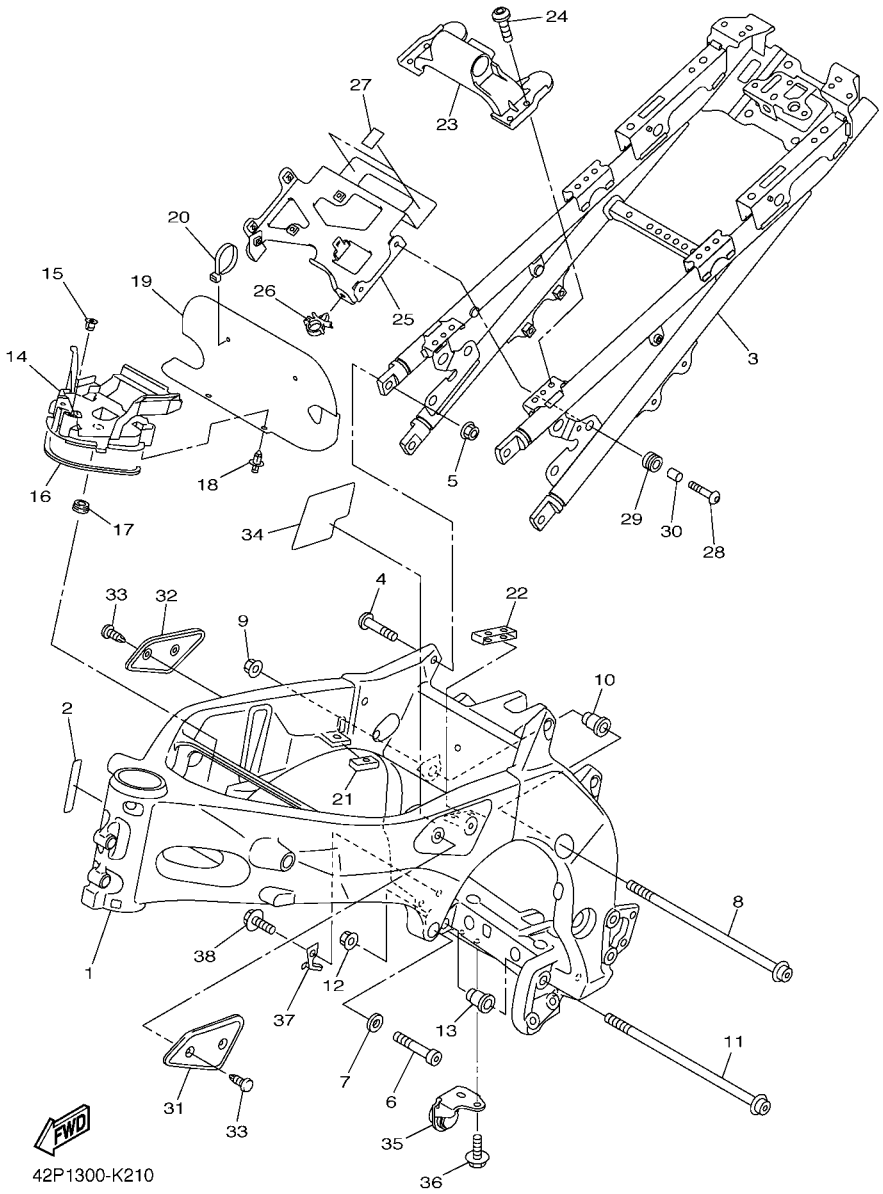

FIG. 21 CUADRO

REF. Nº	CODIGO Nº	DESCRIPCION	42PG					OBSERVACIONES
1	2D1–21110–03–P0	ARMAZON COMPLETO	1					MBL2
2	2D1–2197E–00	PROTECTOR DE CUADRO	1					
3	39P–21190–00	CUADRO TRASERO COMPLETA	1					
4	90157–10001	TORNILLO CABEZA CONICA PLANA	4					
5	95602–10200	TUERCA DE AUTO-CIERRE	4					
6	91314–10040	TORNILLO ALLEN	2					
7	90201–10020	ARANDELA PLANA	2					
8	90110–10024	TORNILLO ALLEN	1					
9	90179–10025	TUERCA	1					
10	4C8–21495–00	PERNO DE AJUSTE	1					
11	90110–10024	TORNILLO ALLEN	1					
12	90179–10025	TUERCA	1					
13	4C8–21495–00	PERNO DE AJUSTE	1					
14	39P–2117N–00	CUBIERTA 3	1					
15	90269–08058	REMACHE	1					
16	2D1–2174Y–00	AMORTIGUADOR	1					
17	90480–01333	TAPON	1					
18	90269–06001	REMACHE	2					
19	2D1–2117G–00	PROTECTOR	1					
20	1UA–82591–00	BANDA	2					
21	2D1–24184–00	AMORTIGUADOR DE MONTAJE 4	1					
22	2D1–24185–00	AMORTIGUADOR DE MONTAJE 5	1					
23	39P–2413Y–00	SOPORTE ACCESORIO DE DEPOSITO	1					
24	90111–06038	TORNILLO	4					
25	39P–21287–00	SOPORTE DE REGULADOR	1					
26	90464–16006	BRIDA	1					
27	5YU–21639–00	AMORTIGUADOR 2	2					

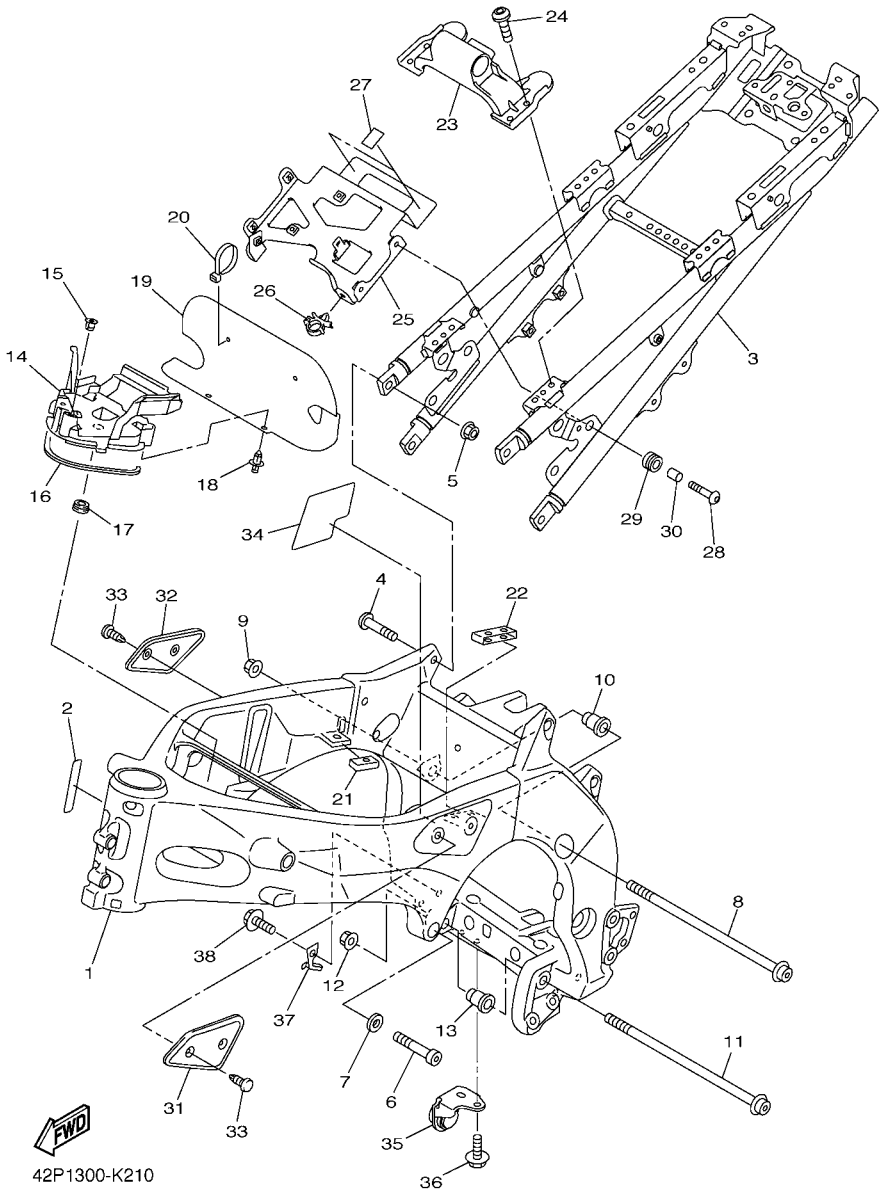

FIG. 21 CUADRO

REF. Nº	CODIGO Nº	DESCRIPCION	42PG					OBSERVACIONES
28	92012–06020	PERNO	4					
29	90480–14030	TAPON	4					
30	90387–065L7	ESPACIADOR	4					
31	2D1–24129–00	CUBIERTA LATERAL 1	1					
32	2D1–24139–00	CUBIERTA LATERAL 2	1					
33	90269–06003	REMACHE	4					
34	39P–21575–00	SELLO 1	1					
35	39P–27425–00	SOPORTE DE APOYAPIE 2	1					
36	95812–08016	TORNILLO DE REBORDE	2					
37	39P–27267–00	GUIA DE CABLE	1					
38	95022–10016	PERNO, DE BRIDA	1					

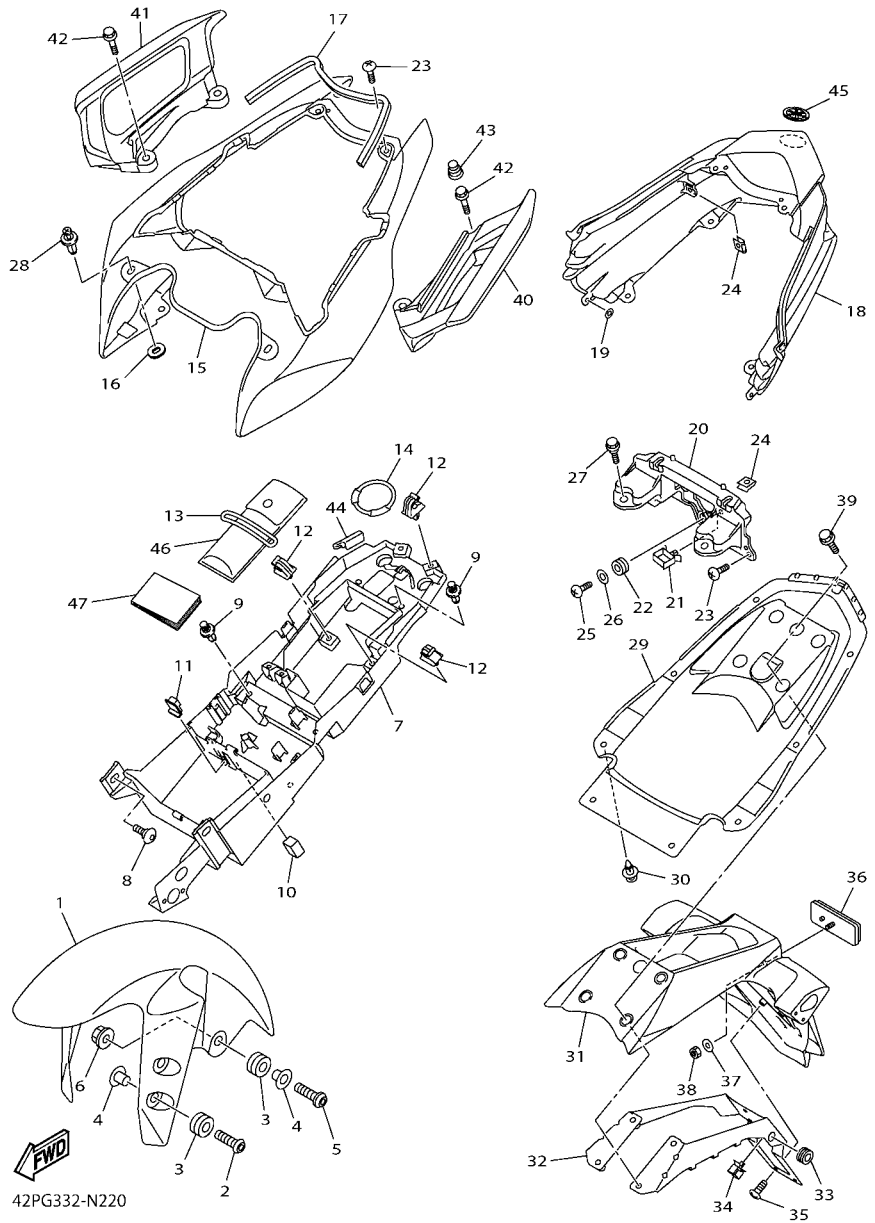

FIG. 22 GUARDABARRO

REF. Nº	CODIGO Nº	DESCRIPCION	42PG					OBSERVACIONES
1	5PW–21511–01–PH	GUARDABARRO DELANTERO	1					MBL2
2	90149–06302	TORNILLO DE REGLAJE	4					
3	90480–12072	TAPON	6					
4	90387–065J6	ESPACIADOR	6					
5	90111–06030	TORNILLO	2					
6	95702–06500	TUERCA DE BRIDA	2					
7	2D1–8212B–02	CAJA DE BATERIA	1					
8	90109–06253	PERNO	2					
9	90269–07077	REMACHE	4					
10	2D1–216A2–00	SELLO 2	1					
11	2D1–216A3–00	SELLO 3	1					
12	90464–07259	BRIDA	4					
13	4XV–21376–00	BANDA DE HERRAMIENTA	1					
14	2D1–21646–00	BANDA	1					
15	42P–21651–00–P4	TAPA DE GUARDABARRO TRAS.	1					MBL2
16	5PW–2174X–00	AMORTIGUADOR	2					
17	90520–05015	EQUILIBRIO, CUBIERTA	1					
18	39P–2163A–00	CUBIERTA TRAS GUARDABARRO 1	1					
19	90183–05M02	TUERCA DE RESORTE	2					
20	39P–2117E–00	SOPORTE DE LANTERNA TRAZERA	1					
21	90464–16021	BRIDA	1					
22	90480–18276	TAPON	3					
23	97702–50016	TORNILLO ROSCA HEMBRA	4					
24	90183–05042	TUERCA DE RESORTE	4					
25	97702–50014	TORNILLO ROSCA HEMBRA	3					
26	90201–05036	ARANDELA PLANA	3					
27	90109–06172	PERNO	2					

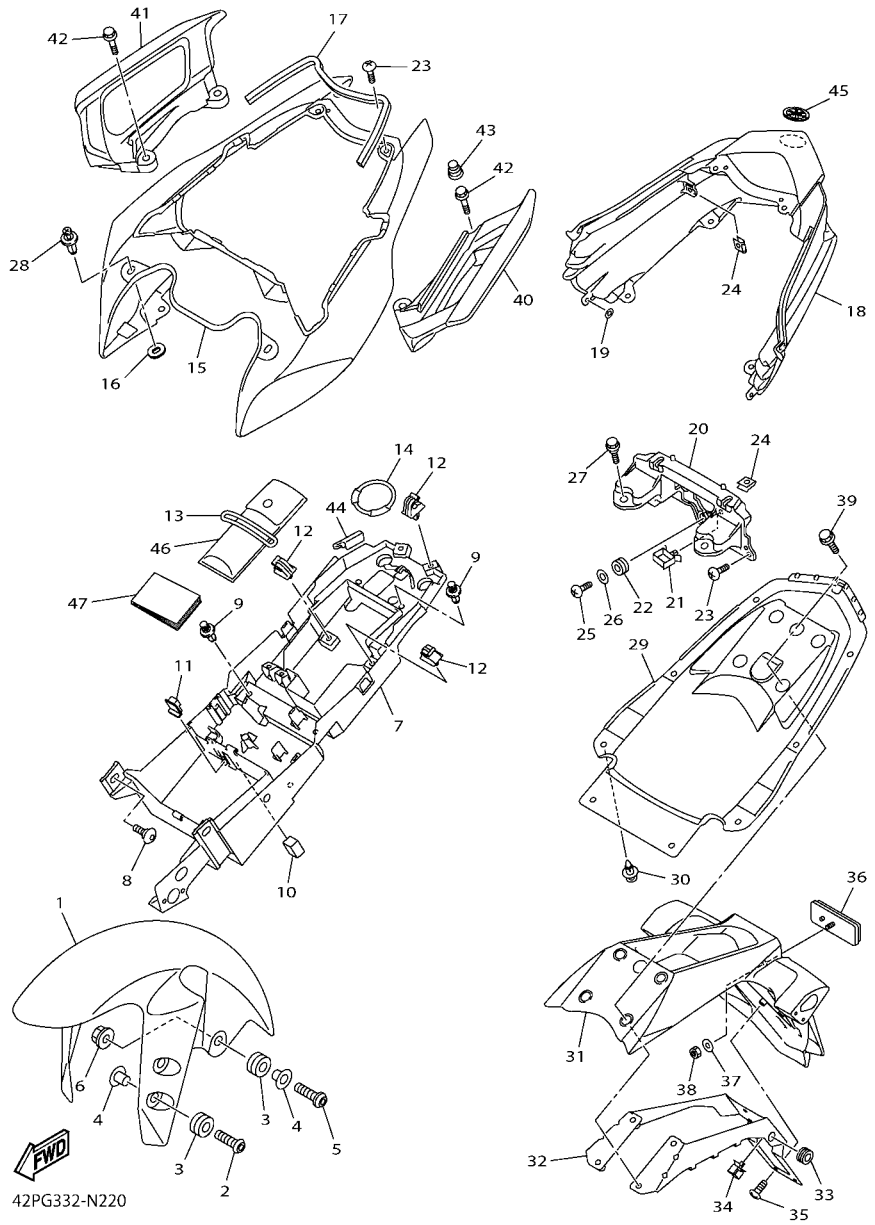

FIG. 22 GUARDABARRO

REF. Nº	CODIGO Nº	DESCRIPCION	42PG					OBSERVACIONES
28	90269–07076	REMACHE	2					
29	39P–21611–00	GUARDABARRO TRASERO	1					
30	90269–07077	REMACHE	8					
31	2D1–21629–00	GUARDABARRO INFERIOR	1					
32	2D1–21688–02	SOPORTE	1					
33	90480–13004	TAPON	2					
34	90464–16021	BRIDA	1					
35	90160–05012	TORNILLO REDONDO ROSCA HEMBRA	6					
36	3Y6–85130–02	REFLECTOR TRASERO COMPLETO	1					
37	90201–05043	ARANDELA PLANA	1					
38	95602–05100	TUERCA U	1					
39	90105–08180	TORNILLO	4					
40	42P–2474A–00	FIADOR DE EMPUNADURA	1					
41	42P–2474W–00	FIADOR DE EMPUNADURA 2	1					
42	95822–08025	TORNILLO DE REBORDE	4					
43	4GL–84178–00	TAPON	2					
44	39P–24785–00	MOLDURA DE ASIENTO	2					
45	4KN–2836B–10	MARCA	1					
46	42P–28100–10	JUEGO DE HERRAMIENTAS	1					
47	42P–28199–S3	MANUAL DEL PROPRIETARIO	1					

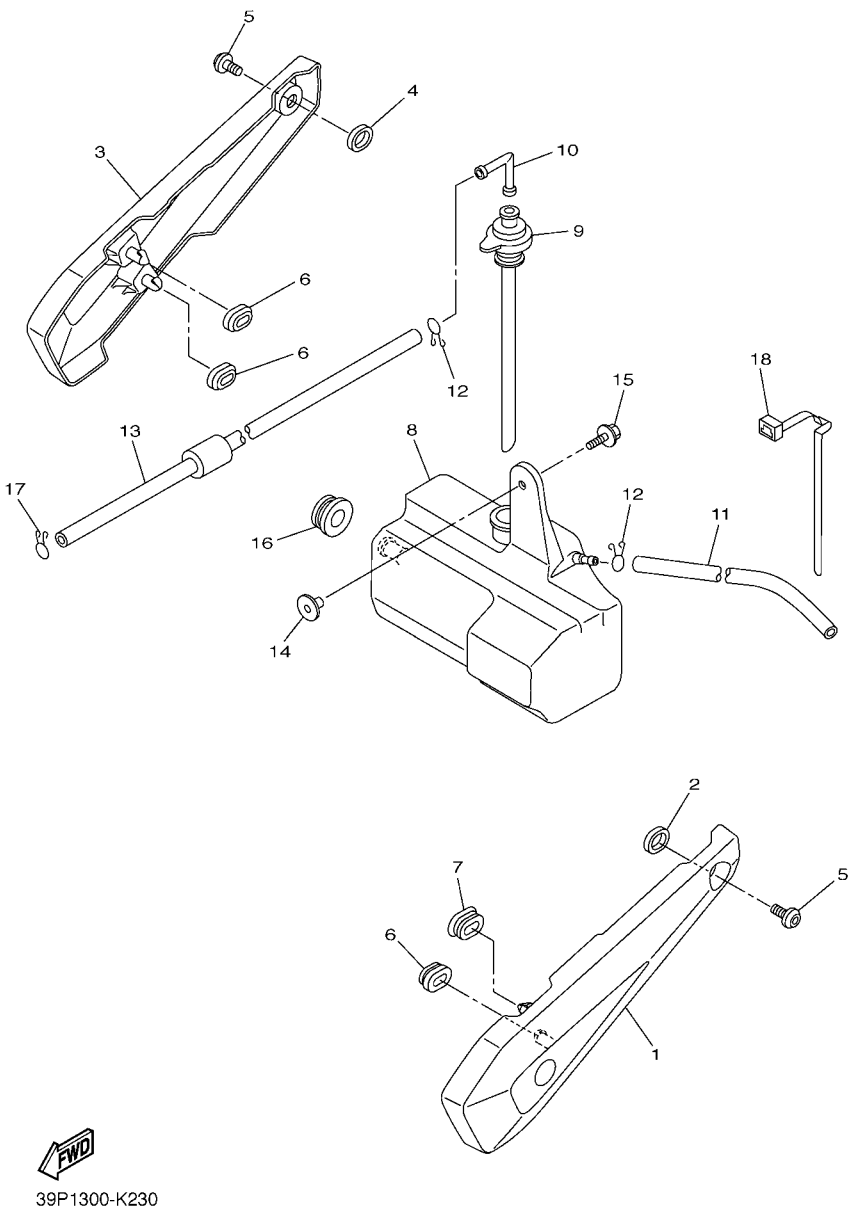

FIG. 23 CUBIERTA LATERAL

REF. Nº	CODIGO Nº	DESCRIPCION	42PG					OBSERVACIONES
1	39P–21711–00	CUBIERTA LATERAL 1	1					
2	39P–2174X–00	AMORTIGUADOR	1					
3	39P–21721–00	CUBIERTA LATERAL 2	1					
4	39P–2174X–00	AMORTIGUADOR	1					
5	90149–06298	TORNILLO DE REGLAJE	2					
6	90480–01559	TAPON	3					
7	2D1–21719–00	ANILLO PROTECTOR	1					
8	2D1–21871–00	TANQUE DE RECUPERACION	1					
9	5VY–21875–00	TAPA	1					
10	26H–21828–00	CODO	1					
11	90445–08022	TUBO	1					
12	90467–08075	PRESILLA	2					
13	90445–087K6	TUBO (L700)	1					
14	90387–062M9	ESPACIADOR	1					
15	90119–06230	TORNILLO CON ARANDELA	1					
16	90480–20001	TAPON	1					
17	90467–08075	PRESILLA	1					
18	90464–07M40	BRIDA	1					

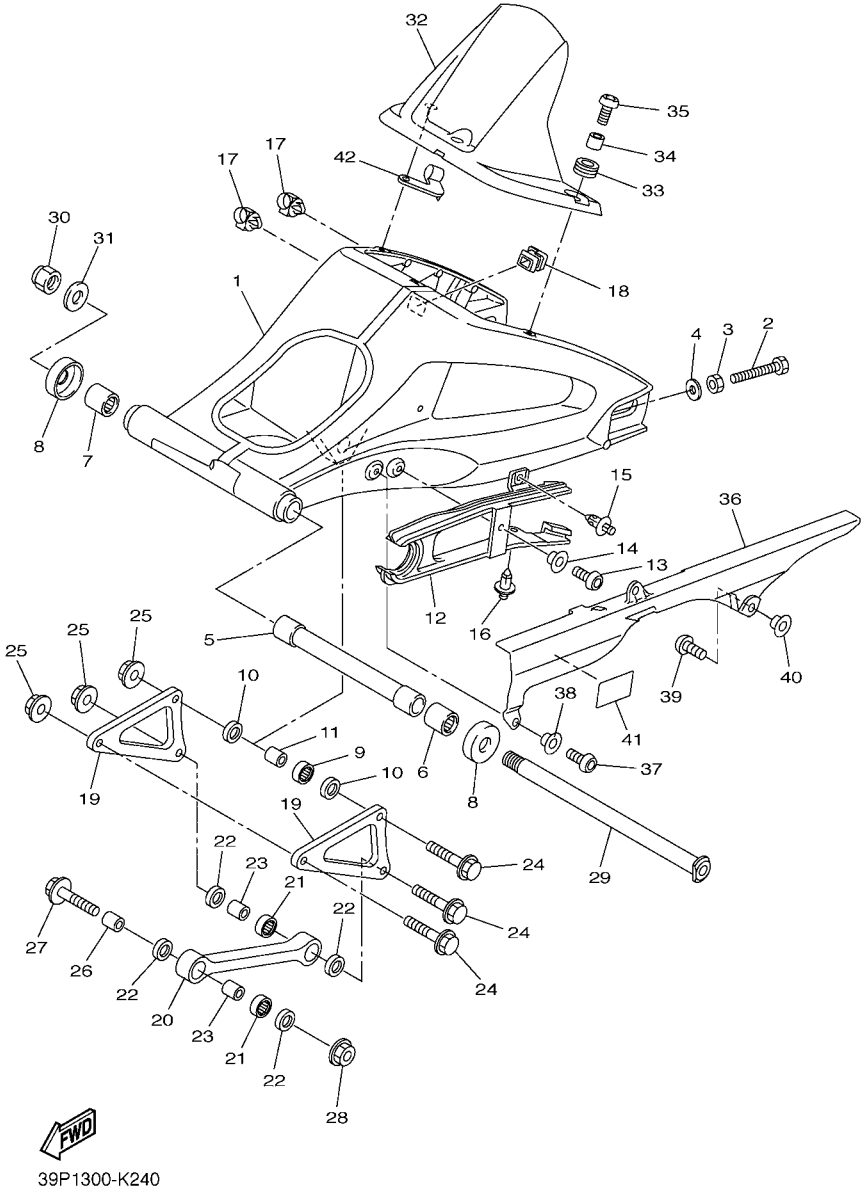

FIG. 24 BRAZO TRASERO

REF. Nº	CODIGO Nº	DESCRIPCION	42PG					OBSERVACIONES
1	39P–22110–00	BRAZO TRASERO COMPLETO	1					
2	90101–08013	TORNILLO	2					
3	95302–08600	TUERCA	2					
4	90201–08057	ARANDELA PLANA	2					
5	39P–22184–00	BUJE	1					
6	93317–42599	COJINETE	1					
7	93315–42536	COJINETE DE RODILLOS	1					
8	5JJ–22128–00	TAPA DE EMPIJE 1	2					
9	93315–41762	COJINETE DE RODILLOS	1					
10	93109–17071	SELLO ACEITE	2					
11	90387–1012A	ESPACIADOR	1					
12	2D1–22151–00	SELLO DE GUARDA	1					
13	92012–06014	PERNO	1					
14	90387–06130	ESPACIADOR	1					
15	90269–07007	REMACHE	1					
16	90269–07008	REMACHE	1					
17	90464–17003	BRIDA	2					
18	2D1–22117–00	TAPA	1					
19	2D1–2217A–10	BRAZO REEURIO	2					
20	2D1–2217M–00	BRAZO 1	1					
21	93315–31758	COJINETE DE RODILLOS	2					
22	93109–17071	SELLO ACEITE	4					
23	90387–1012A	ESPACIADOR	2					
24	90105–10283	TORNILLO	3					
25	95602–10200	TUERCA DE AUTO-CIERRE	3					
26	90387–10043	ESPACIADOR	1					
27	90105–10211	TORNILLO	1					

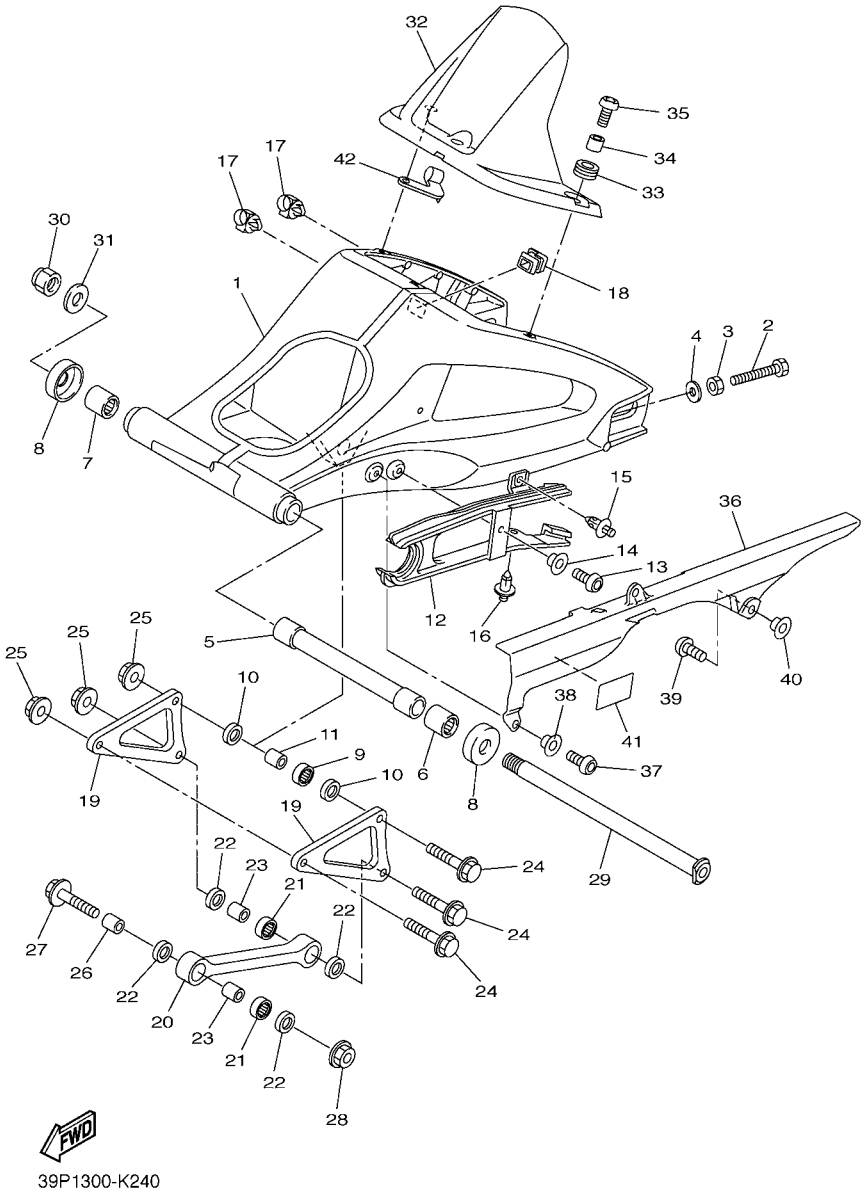

FIG. 24 BRAZO TRASERO

REF. Nº	CODIGO Nº	DESCRIPCION	42PG					OBSERVACIONES
28	95602–10200	TUERCA DE AUTO-CIERRE	1					
29	39P–22141–00	EJE DEL BARCULANTE	1					
30	90185–18009	TUERCA AUTOBLOCANTE	1					
31	90201–18013	ARANDELA PLANA	1					
32	2D1–21650–00	GUARDABARRO TRANSERO COMP.	1					
33	90480–12003	TAPON	3					
34	90387–06219	ESPACIADOR	3					
35	90149–06302	TORNILLO DE REGLAJE	3					
36	5SL–22311–00	CABRECADENA	1					
37	92012–06014	PERNO	1					
38	90387–06130	ESPACIADOR	1					
39	90110–06102	TORNILLO ALLEN	2					
40	90387–06009	ESPACIADOR	2					
41	14B–21668–00	ETIQUETA DE FRANJA	1					
42	2D1–25886–00	SOPORTE DE MANGUERA FRENO	1					

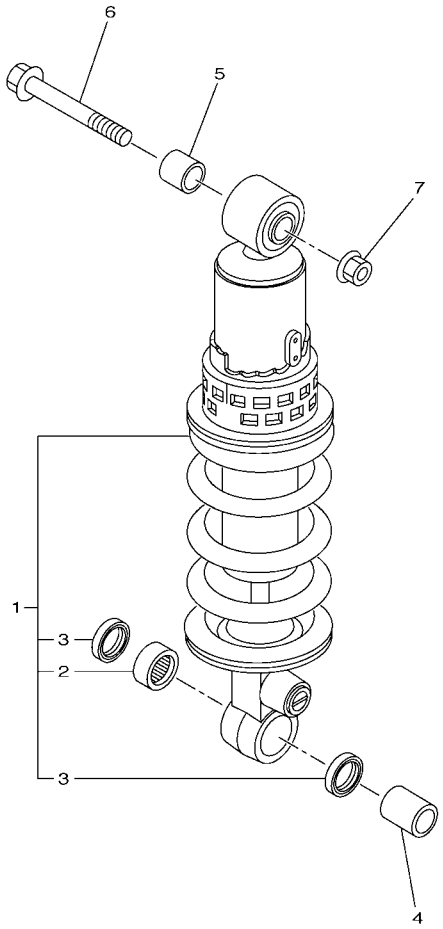

59P5300-M250

FIG. 25 SUSPENSION TRASERO

REF. Nº	CODIGO Nº	DESCRIPCION	42PG					OBSERVACIONES
1	39P–22210–30	AMORTIGUADOR TRASERO COMPLETO	1					
2	93315–31758	.COJINETE DE RODILLOS	1					
3	93109–17071	.SELLO ACEITE	2					
4	90387–1012A	ESPACIADOR	1					
5	90387–10043	ESPACIADOR	1					
6	90105–10211	TORNILLO	1					
7	95602–10200	TUERCA DE AUTO-CIERRE	1					

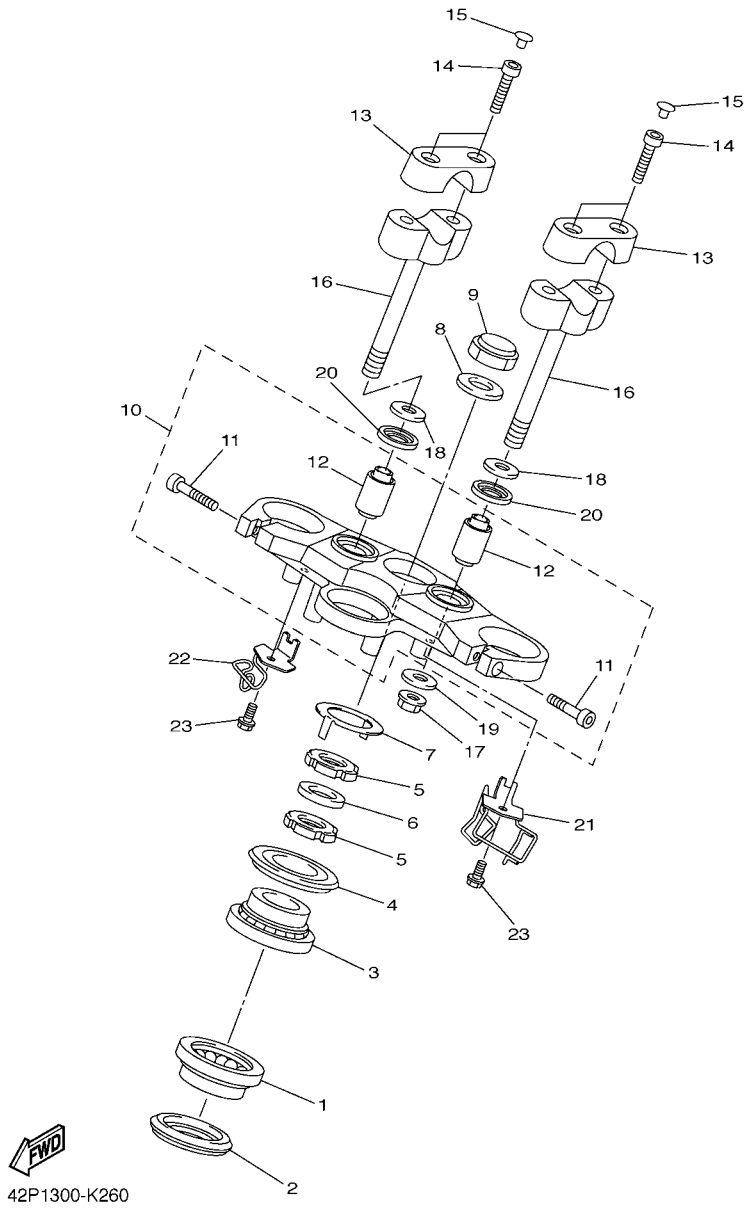

FIG. 26 DIRECCION

REF. Nº	CODIGO Nº	DESCRIPCION	42PG					OBSERVACIONES
1	93399–99957	COJINETE	1					
2	3FV–23462–00	SELLO PARA POLVO	1					
3	93399–99932	COJINETE	1					
4	4XV–23415–01	CUBIERTA DE PISTA DE BOLAS 1	1					
5	90179–30006	TUERCA	2					
6	90202–30235	ARANDELA DE PLANA	1					
7	4XV–23418–00	ARANDELA ESPECIAL	1					
8	90201–281U8	ARANDELA PLANA	1					
9	90176–28083	TUERCA CORONA	1					
10	39P–23405–00	PLATINA SUPERIOR	1					
11	91312–08030	.TORNILLO	2					
12	3VD–23434–00	.SOPORTE DE AMORTIGUADOR	2					
13	4H7–23441–01–P6	SOPORTE DE MANUBRIO	2					MBL2
14	91312–08030	TORNILLO	4					
15	90338–06004	TAPON	4					
16	3Y6–23442–00–P2	SOPORTE DE MANUBRIO INFERIOR	2					MBL2
17	95602–10200	TUERCA DE AUTO-CIERRE	2					
18	92902–10200	ARANDELA	2					
19	90201–10065	ARANDELA PLANA	2					
20	39P–23445–00	AMORTIGUADOR	2					
21	3C3–23318–00	SOSTEN DE CABLE 1	1					
22	3C3–23319–00	SOSTEN DE CABLE 2	1					
23	90105–06078	TORNILLO	2					

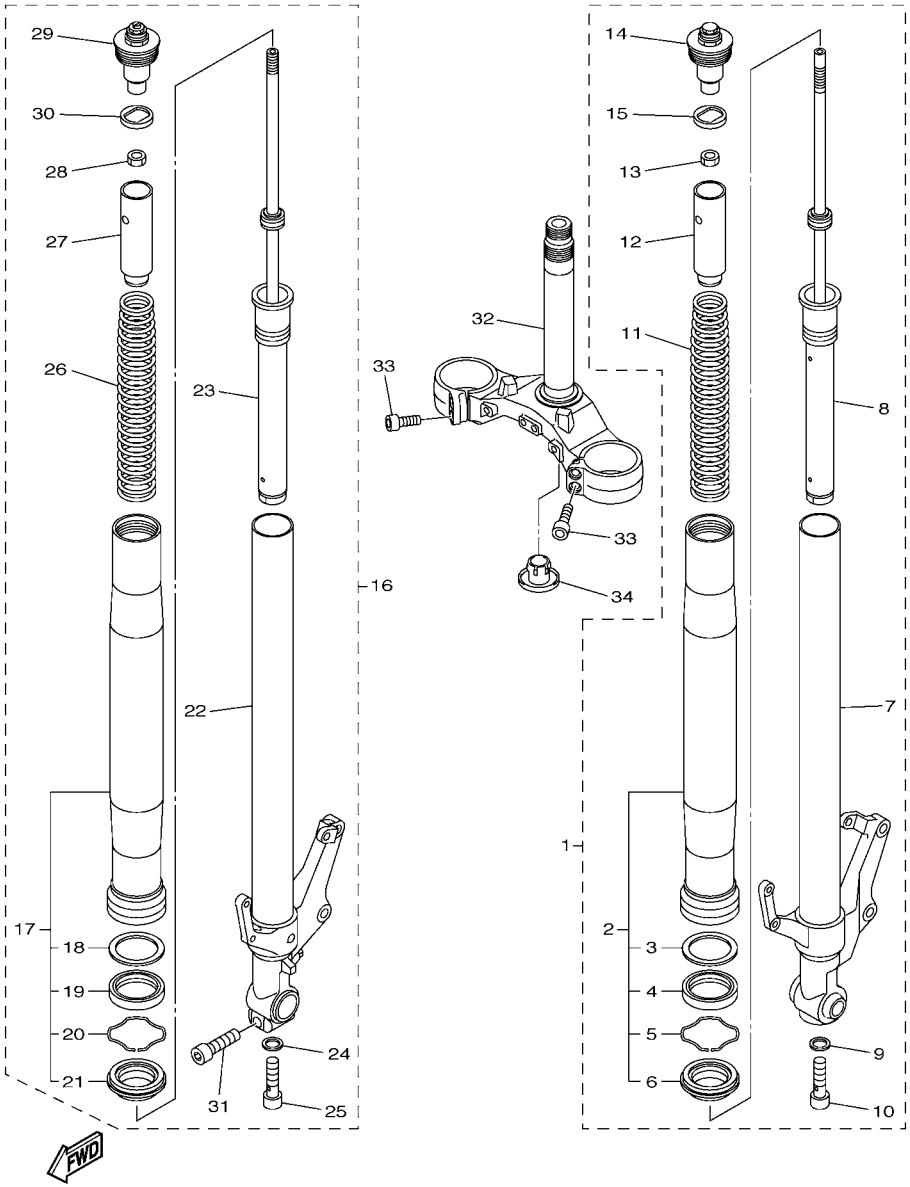

FIG. 27 HORQUILLA DELANTERA

REF. Nº	CODIGO Nº	DESCRIPCION	42PG					OBSERVACIONES
1	39P–23102–30	HORQUILLA DELANTERA COMPL.(MI)	1					
2	39P–23136–00	.TUBO EXTERIOR 2	1					
3	4V4–23146–L0	..ARANDELA DE SELLO DE ACEITE	1					
4	4PU–23145–01	..RETEN DE ACEITE	1					
5	4V4–23153–L0	..ANILLO DE ENGANCHE	1					
6	4PU–23144–00	..GUARDAPOLVO	1					
7	39P–23110–00	.TUBO INTERIOR COMPLETO 1	1					
8	39P–23170–20	.CILINDRO COMPL DE HORQ DELANT	1					
9	509–23158–L0	.EMPAQUE	1					
10	5UX–23181–00	.TORNILLO CABEZAHEXAGONAL	1					
11	39P–23141–10	.RESORTE HORQUILLA DELANT.	1					
12	5VY–23118–00	.SEPARADOR	1					
13	3LC–23357–00	.TUERCA	1					
14	39P–23111–50	.PERNO DE TAPA	1					
15	5VY–12277–00	.ARANDELA	1					
16	39P–23103–30	HORQUILLA DELANTERA COMPL.(MD)	1					
17	39P–23136–00	.TUBO EXTERIOR 2	1					
18	4V4–23146–L0	..ARANDELA DE SELLO DE ACEITE	1					
19	4PU–23145–01	..RETEN DE ACEITE	1					
20	4V4–23153–L0	..ANILLO DE ENGANCHE	1					
21	4PU–23144–00	..GUARDAPOLVO	1					
22	39P–23120–10	.TUBO INTERIOR COMPLETO 2	1					
23	39P–23170–30	.CILINDRO COMPL DE HORQ DELANT	1					
24	509–23158–L0	.EMPAQUE	1					
25	5UX–23181–00	.TORNILLO CABEZAHEXAGONAL	1					
26	39P–23141–10	.RESORTE HORQUILLA DELANT.	1					
27	5VY–23118–00	.SEPARADOR	1					

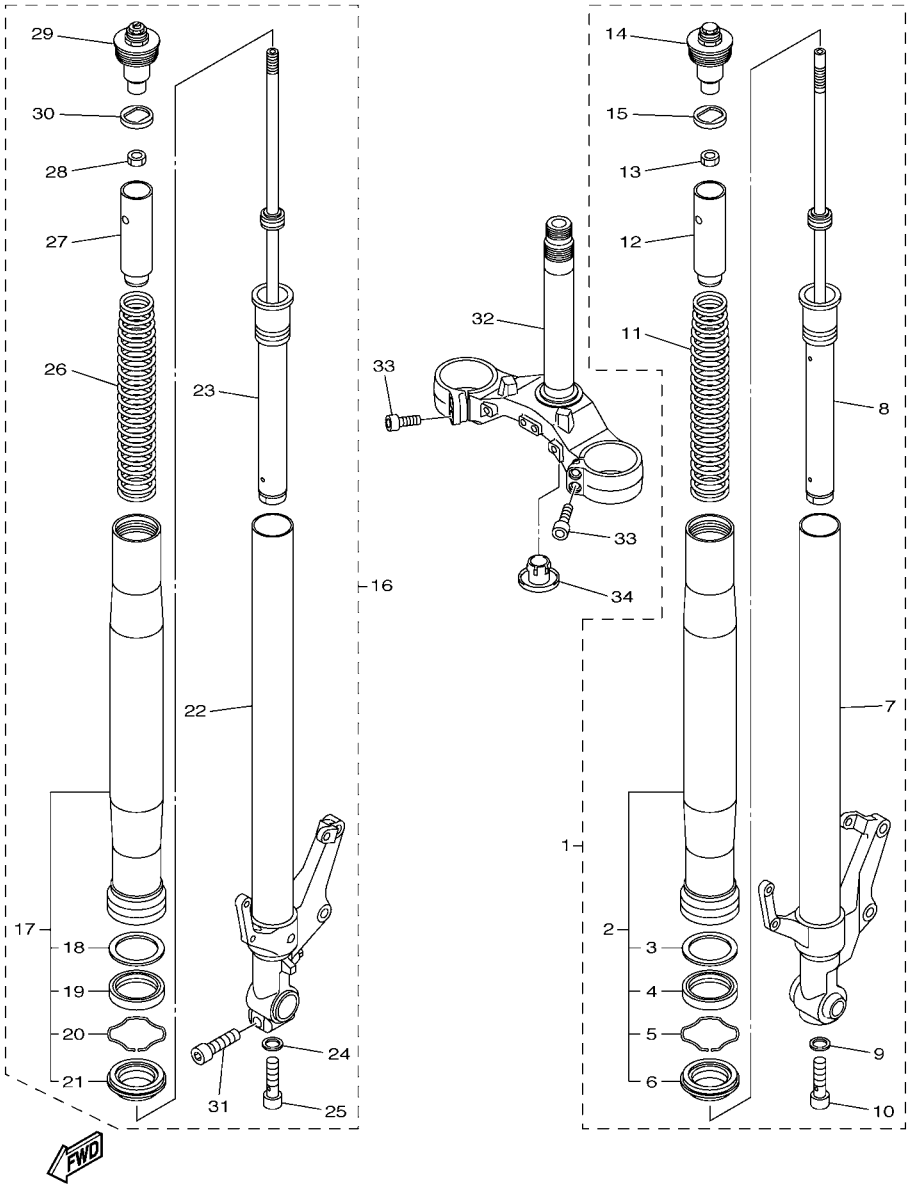

FIG. 27 HORQUILLA DELANTERA

REF. Nº	CODIGO Nº	DESCRIPCION	42PG					OBSERVACIONES
28	3LC–23357–00	.TUERCA	1					
29	39P–23111–60	.PERNO DE TAPA	1					
30	5VY–12277–00	.ARANDELA	1					
31	91314–08040	.TORNILLO ALLEN	1					
32	39P–23340–00	PLATINA INFERIOR COMPLETA	1					
33	91312–08030	TORNILLO	4					
34	4KM–23123–01	CUBIERTA INFERIOR	1					

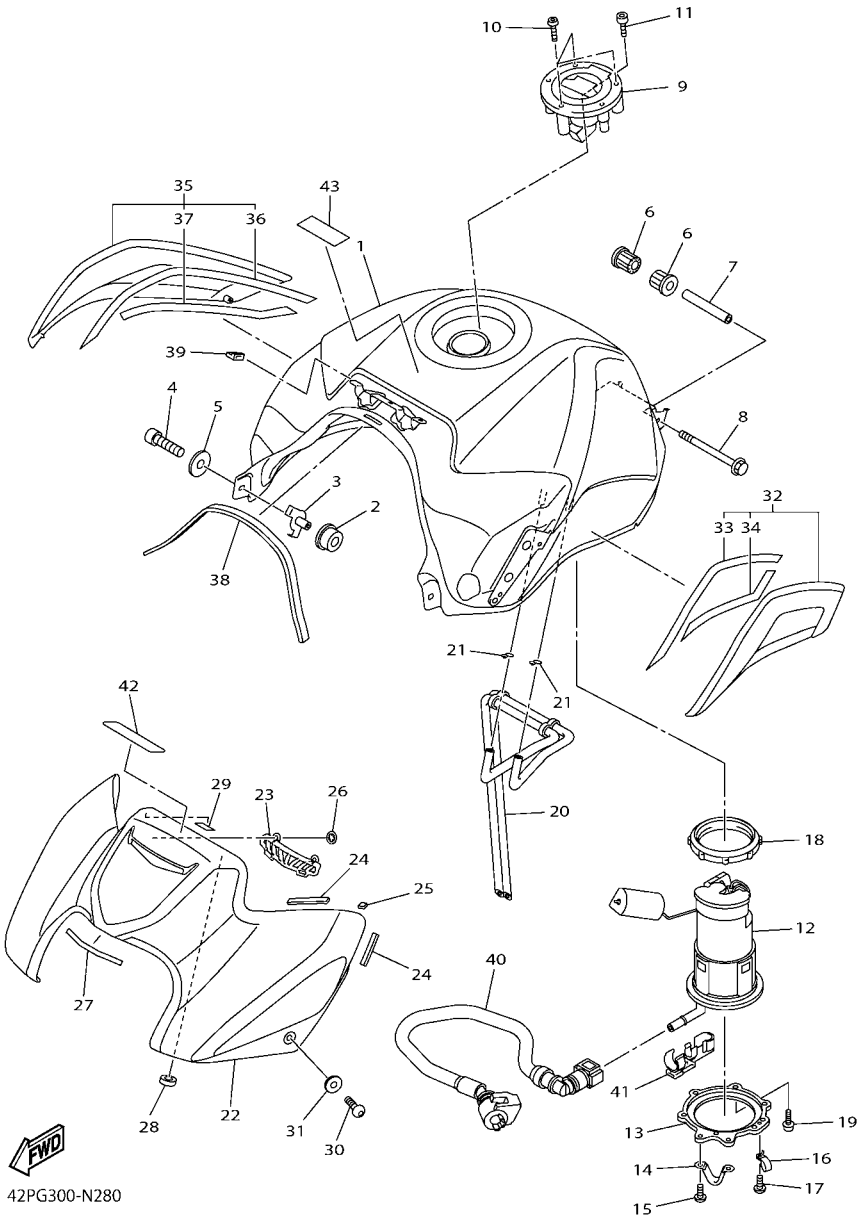

FIG. 28 DEPOSITO DE COMBUSTIBLE

REF. Nº	CODIGO Nº	DESCRIPCION	42PG					OBSERVACIONES
1	39P–Y2410–00–09	DEPOSITO DE COMBUSTIBLE COMP.	1					DNMN
2	5VY–24181–00	AMORTIGUADOR DE MONTAJE 1	2					
3	2D1–2412G–00	COLLAR	2					
4	91312–06016	TORNILLO	2					
5	90201–06086	ARANDELA PLANA	2					
6	5SL–24183–00	AMORTIGUADOR DE MONTAJE 3	2					
7	90387–06055	ESPACIADOR	1					
8	95022–06090	PERNO, DE BRIDA	1					
9	39P–24602–10	TAPON COMPLETO	1					
10	90110–05112	TORNILLO ALLEN	3					
11	91312–05010	TORNILLO	1					
12	39P–13907–00	BOMBA DE COMBUSTIBLE COMPLETA	1					
13	39P–24491–00	SOPORTE BOMBA COMBUSTIBLE	1					
14	2D1–24192–00	SOPORTE DE DEPOSITO COMBUST.2	1					
15	98902–05008	TORNILLO DE LIGAR	2					
16	90461–10010	GRAPA	1					
17	90154–05035	TORNILLO DE LIGAR	1					
18	19B–24486–01	ANILLO O	1					
19	90110–05028	TORNILLO ALLEN	6					
20	39P–24317–00	TUBO 7	1					
21	90467–09006	PRESILLA	2					
22	39P–2171A–10–P6	CUBIERTA, TECHO	1					DNMN
23	39P–241B1–00	TAPA DE TANQUE	1					
24	4XV–2834E–00	AMORTIGUADOR 3	4					
25	14B–24181–00	AMORTIGUADOR DE MONTAJE 1	2					
26	90183–05M02	TUERCA DE RESORTE	2					
27	39P–28307–00	SELLO	1					

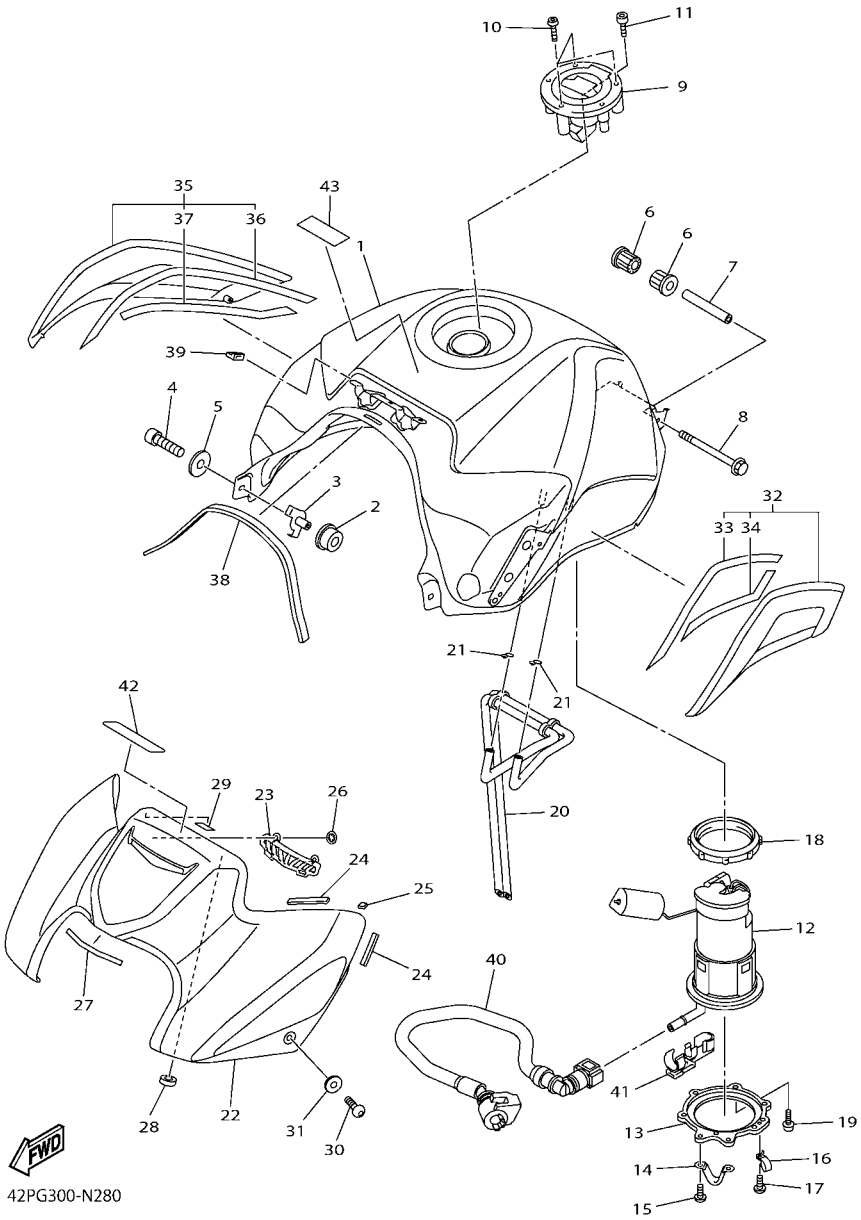

FIG. 28 DEPOSITO DE COMBUSTIBLE

REF. Nº	CODIGO Nº	DESCRIPCION	42PG					OBSERVACIONES
28	4FM–28372–00	AMORTIGUADOR	1					
29	4RR–21485–00	AMORTIGUADOR DE GOMA 1	1					
30	90111–05019	TORNILLO	4					
31	90202–05224	ARANDELA DE PLANA	4					
32	39P–24106–00	CUBIERTA LATERAL COMPLETA 1	1					
33	39P–241A3–00	.SELLO 3	1					
34	39P–241A5–00	.SELLO 5	1					
35	39P–24108–00	CUBIERTA LATERAL COMPLETA 2	1					
36	39P–241A4–00	.SELLO 4	1					
37	39P–241A6–00	.SELLO 6	1					
38	2D1–2414P–00	EQUILIBRIO, CUBIERTA	1					
39	5PW–2411J–01	AMORTIGUADOR, DE CUBIERTA LAT	1					
40	39P–13971–00	ANILLO DE ESPACIADOR	1					
41	90464–16005	BRIDA	1					
42	1CA–21568–00	ETIQUETA DE PRECAUCION	1					
43	1RC–2416B–00	EMBLEMA	1					

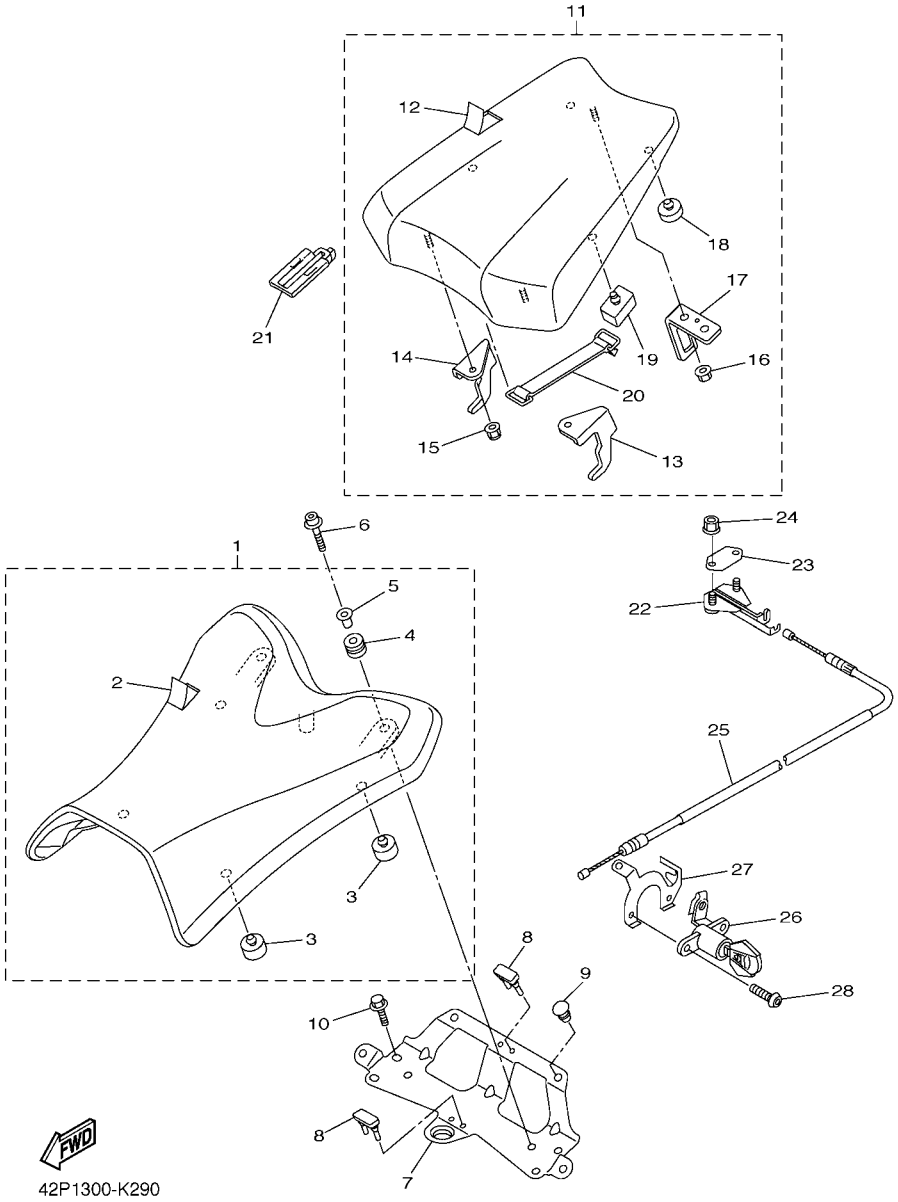

FIG. 29 ASIENTO

REF. Nº	CODIGO Nº	DESCRIPCION	42PG					OBSERVACIONES
1	39P–24710–10	ASIENTO SIMPLE COMPLETO	1					
2	39P–2470F–10	.FUNDADE SILLIN	1					
3	278–27114–00	.TOPE DE PUNTAL PRINCIPAL	4					
4	90480–14604	.TAPON	2					
5	90387–07391	.ESPACIADOR	2					
6	90110–06232	TORNILLO ALLEN	2					
7	39P–21349–00	SOPORTE DE ASIENTO	1					
8	682–44532–00	RETEN	2					
9	90338–07043	TAPON	2					
10	95022–06010	PERNO, DE BRIDA	4					
11	42P–24750–10	ASIENTO TANDEM COMPLETO	1					
12	39P–2470H–10	.FUNDADE SILLIN	1					
13	39P–24718–00	.SOPORTE DE ASIENTO	1					
14	39P–24728–00	.SOPORTE DE ASIENTO	1					
15	95602–06200	.TUERCA DE AUTO-CIERRE	2					
16	95702–06500	.TUERCA DE BRIDA	1					
17	4NK–24728–00	.SOPORTE DE ASIENTO	1					
18	22W–24741–00	.COJIN DE ASIENTO	2					
19	39P–24741–00	.COJIN DE ASIENTO	2					
20	18G–82131–00	.TIRANTE DE BATERIA	1					
21	39P–24768–00	TOPE	1					
22	4BP–24780–00	CERRADURA SILLIN COMPLETO	1					
23	4BP–24792–00	PLACA	1					
24	95702–06500	TUERCA DE BRIDA	2					
25	2D1–2478E–00	CABLE	1					
26	2TV–W2470–00	JUEGO DE ROTOR	1					
27	4XV–2117K–00	SOPORTE DE CERRADURA	1					

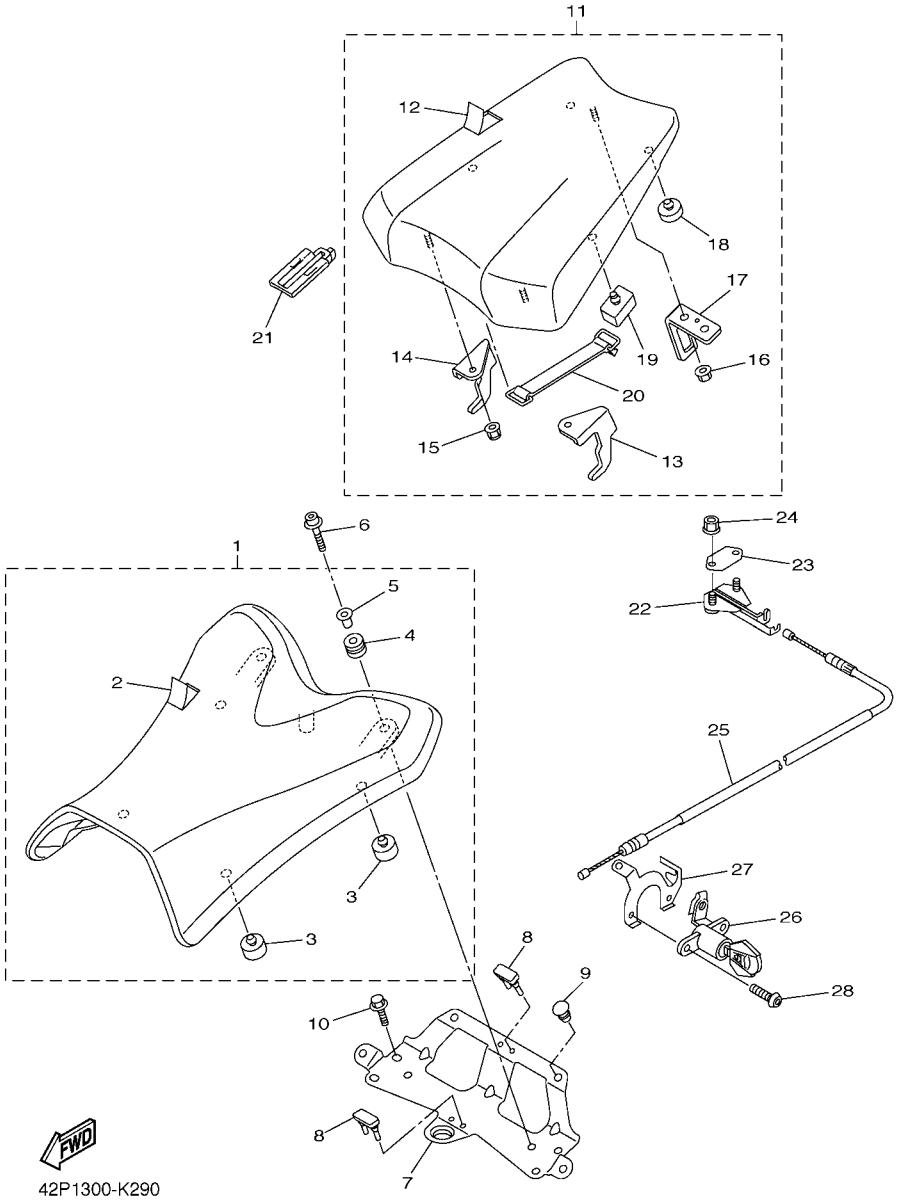

FIG. 29 ASIENTO

REF. Nº	CODIGO Nº	DESCRIPCION	42PG					OBSERVACIONES
28	90149–06134	TORNILLO DE REGLAJE	2					

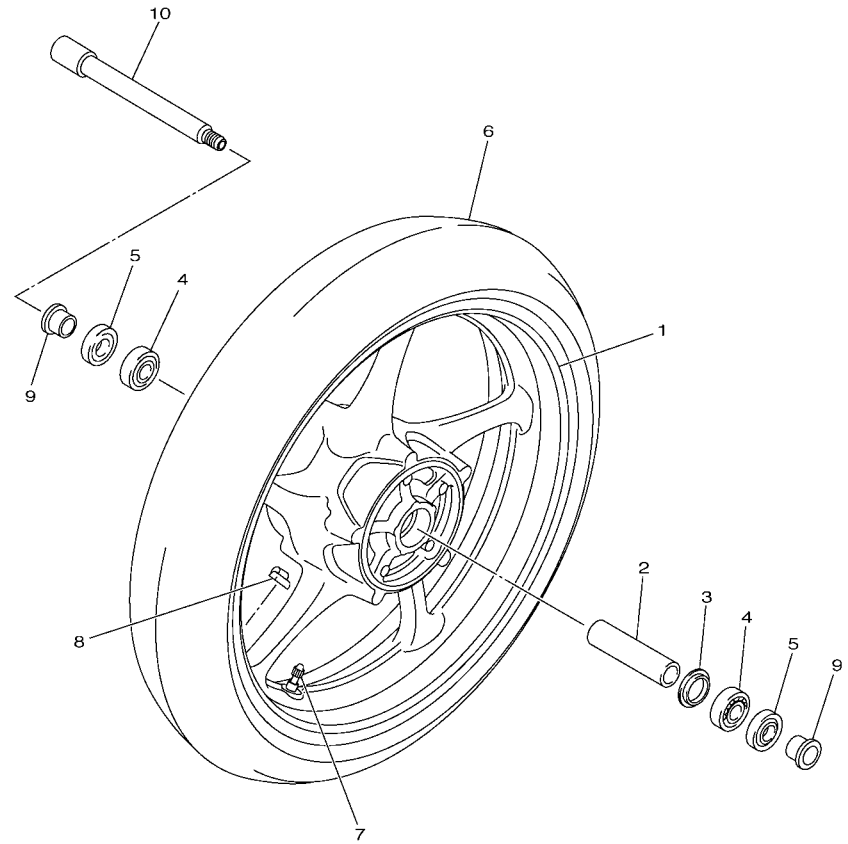

39P1300-K300

FIG. 30 RUEDA DELANTERA

REF. Nº	CODIGO Nº	DESCRIPCION	42PG					OBSERVACIONES
1	39P–25168–00–98	RUEDA FUNDIDA DELANTERA	1					LGB
2	20S–25117–00	ESPACIADOR DE COJINETE	1					
3	146–25315–00	SEPARADOR	1					
4	93306–20352	COJINETE	2					
5	93102–25017	SELLO ACEITE	2					
6	94112–17109	NEUMATICO (120/70ZR17M/C 58W)	1					BRIDGESTONE
7	93900–00030	VALVULA DE ARO (TR412)	1					TAIHEIYO
8	5MT–25398–00	BALANCEADOR DE RUEDA (10G)	1					UN
	5MT–25398–10	BALANCEADOR DE RUEDA (20G)	1					UN
	5MT–25398–20	BALANCEADOR DE RUEDA (30G)	1					UN
9	20S–25183–00	COLLAR DE RUEDA	2					
10	39P–25181–00	EJE DE LA RUEDA	1					

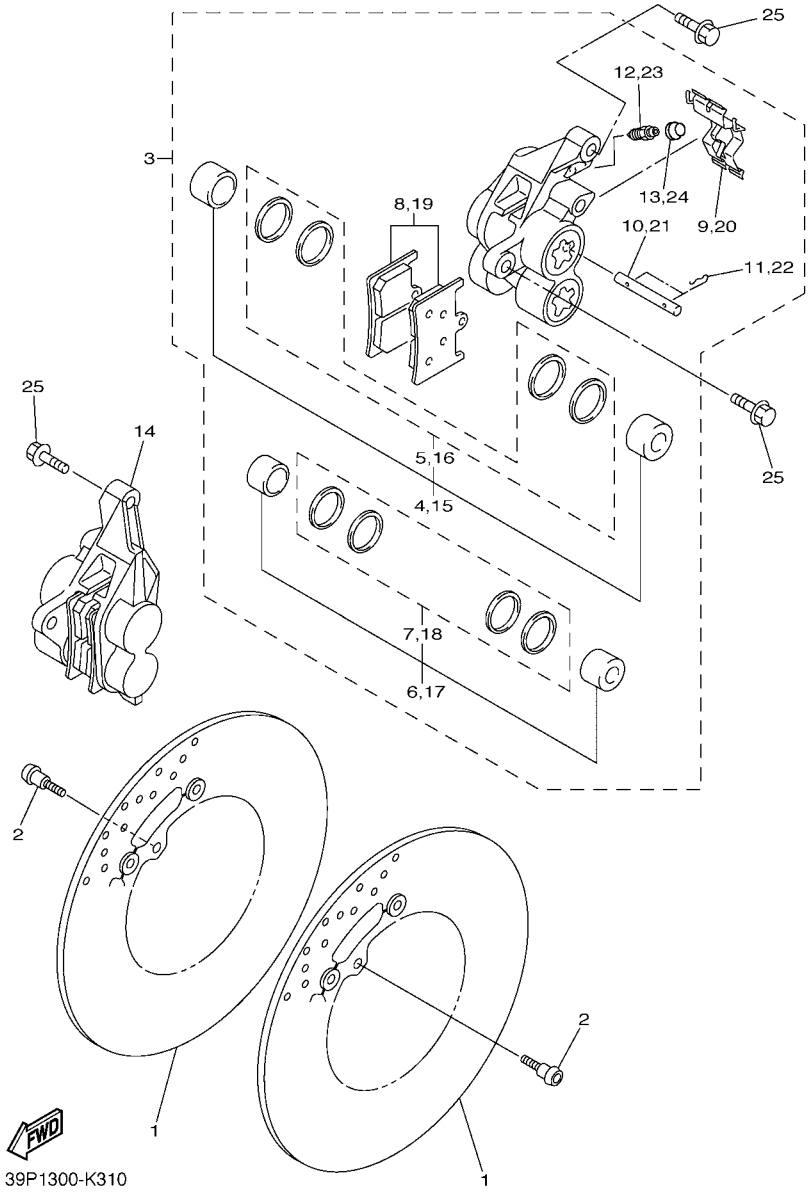

FIG. 31 CALIBRE FRENO DELANTERA

REF. Nº	CODIGO Nº	DESCRIPCION	42PG					OBSERVACIONES
1	39P–2581T–00	DISCO DE FRENO	2					
2	90109–064G6	PERNO	10					
3	39P–2580T–10	CALIBRE COMPLETO (IZQUIERDO)	1					
4	4SV–25802–10	.PISTON COMPLETO PINZA	1					
5	3GM–25803–10	..JUEGO DE RETENES DE PINZA	1					
6	4SV–25802–00	.PISTON COMPLETO PINZA	1					
7	3MA–25803–10	..JUEGO DE RETENES DE PINZA	1					
8	39P–25805–00	.JUEGO DE COJIN DE FRENO	1					
9	13S–25919–00	.SOPORTE DE PASTILLAS	1					
10	4SV–25924–00	.PASADOR	1					
11	3GM–25925–00	.PRESILLA	2					
12	1J3–25824–00	.TORNILLO DE RESPIRADERO	1					
13	306–25825–01	.TAPA	1					
14	39P–2580U–10	CALIBRE COMPLETO (DERECHO)	1					
15	4SV–25802–10	.PISTON COMPLETO PINZA	1					
16	3GM–25803–10	..JUEGO DE RETENES DE PINZA	1					
17	4SV–25802–00	.PISTON COMPLETO PINZA	1					
18	3MA–25803–10	..JUEGO DE RETENES DE PINZA	1					
19	39P–25805–00	.JUEGO DE COJIN DE FRENO	1					
20	13S–25919–00	.SOPORTE DE PASTILLAS	1					
21	4SV–25924–00	.PASADOR	1					
22	3GM–25925–00	.PRESILLA	2					
23	1J3–25824–00	.TORNILLO DE RESPIRADERO	1					
24	306–25825–01	.TAPA	1					
25	90105–10638	TORNILLO	4					

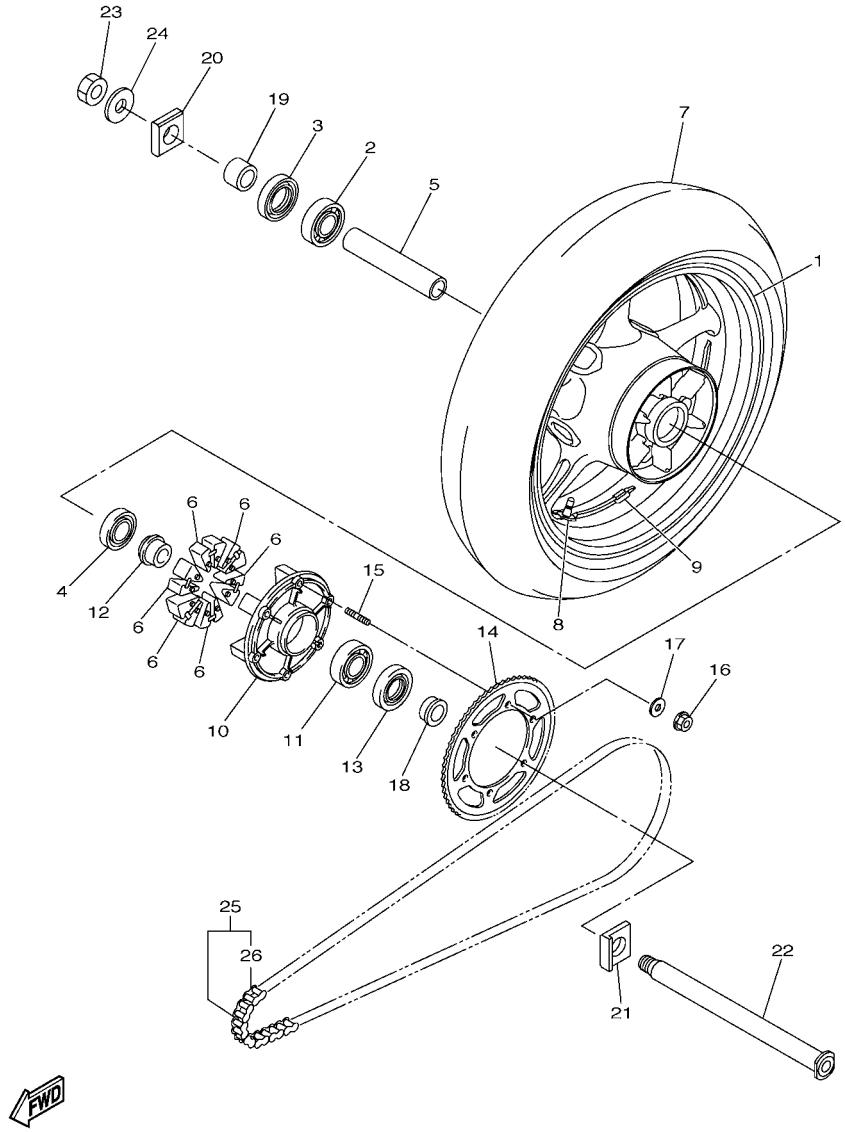

FIG. 32 RUEDA TRASERA

REF. Nº	CODIGO Nº	DESCRIPCION	42PG					OBSERVACIONES
1	39P–25338–00–98	RUEDA FUNDIDA TRASERA	1					LGB
2	93306–20531	COJINETE	1					
3	93106–40013	SELLO ACEITE	1					
4	93306–07806	COJINETE	1					
5	39P–25317–00	ESPACIADOR DE COJINETE	1					
6	5EA–25364–00	AMORTIGUADOR	6					
7	94118–17072	NEUMATICO (180/55ZR17M/C)	1					BRIDGESTONE
8	93900–00030	VALVULA DE ARO (TR412)	1					TAIHEIYO
9	5MT–25398–00	BALANCEADOR DE RUEDA (10G)	1					UN
	5MT–25398–10	BALANCEADOR DE RUEDA (20G)	1					UN
	5MT–25398–20	BALANCEADOR DE RUEDA (30G)	1					UN
10	20S–25366–10	EMBRAGUE DE MASA	1					
11	93306–20659	COJINETE	1					
12	4FM–25377–00	COLLAR DE RUEDA	1					
13	93106–40041	SELLO ACEITE	1					
14	39P–25446–00	CORONA (46T)	1					
15	90116–10048	ESPARRAGO	6					
16	90185–10012	TUERCA AUTOBLOCANTE	6					
17	90201–10021	ARANDELA PLANA	6					
18	90387–28015	ESPACIADOR	1					
19	90387–28014	ESPACIADOR	1					
20	5VY–25388–00	TIRADOR DE CADENA 1	1					
21	5VY–25389–01	TIRADOR DE CADENA 2	1					
22	2D1–25381–00	EJE DE RUEDA	1					
23	90185–24007	TUERCA AUTOBLOCANTE	1					
24	90201–25020	ARANDELA PLANA	1					
25	94582–31122	CADENA (DID 525V10-121LL)	1					

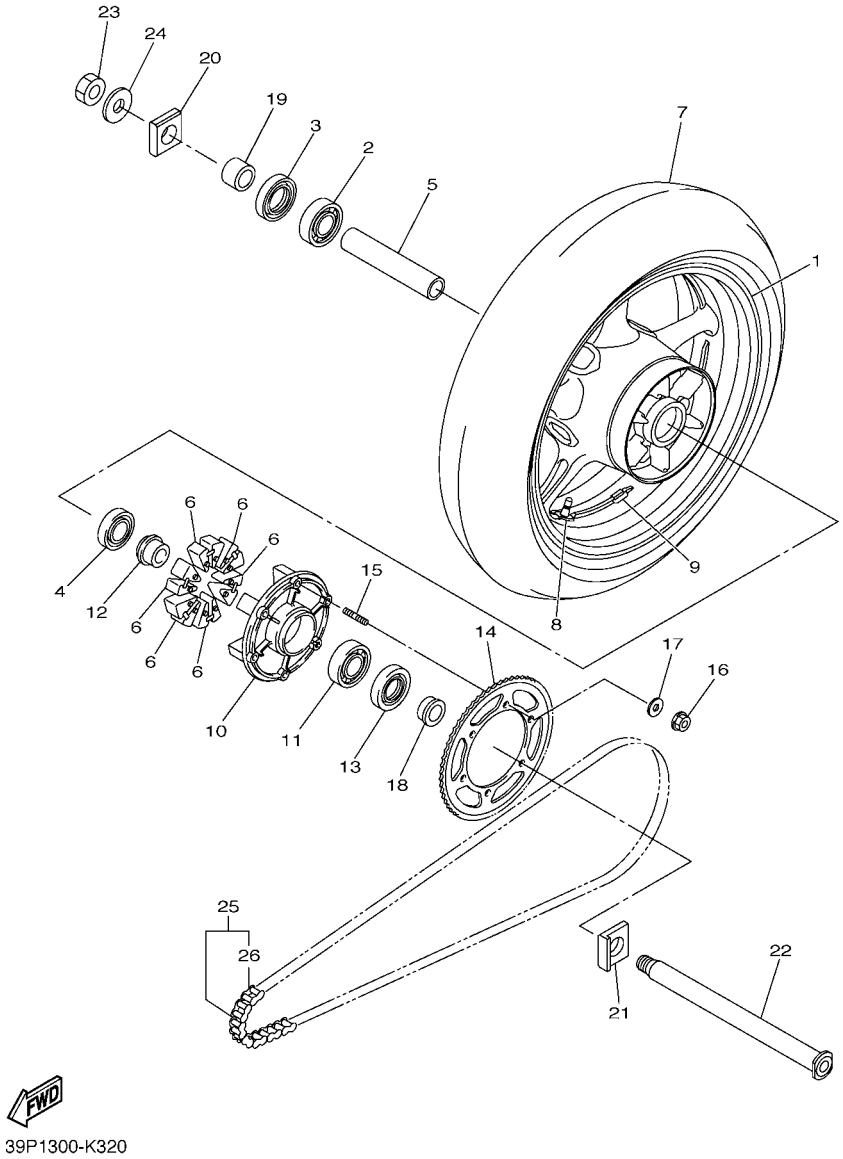

FIG. 32 RUEDA TRASERA

REF. Nº	CODIGO Nº	DESCRIPCION	42PG					OBSERVACIONES
26	94682–31031	.JUNTA, DE CADENA(DID525V10-ZJ)	1					

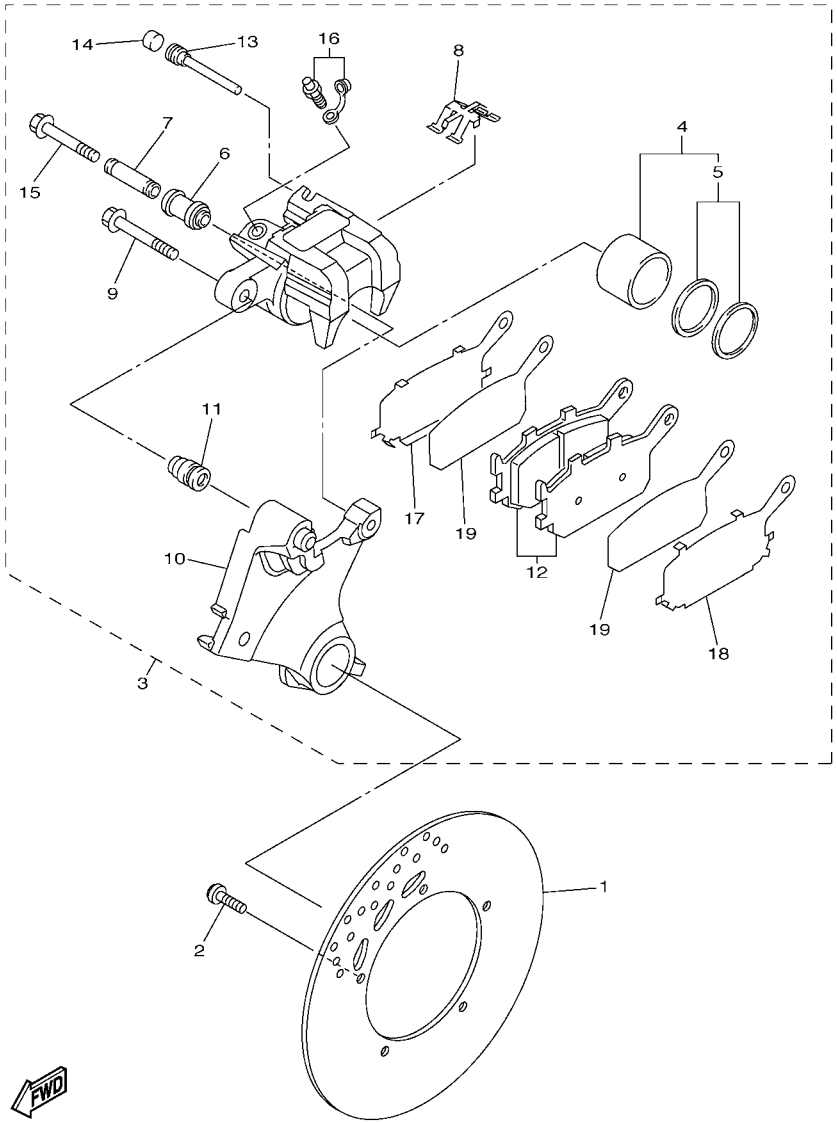

39P1300-K330

FIG. 33 CALIBRE FRENO TRASERA

REF. Nº	CODIGO Nº	DESCRIPCION	42PG					OBSERVACIONES
1	39P–2582W–00	DISCO DE FRENO TRASEROS 2	1					
2	90109–083G4	PERNO	5					
3	39P–2580W–00	CALIBRE COMPLETO TRASEROS 2	1					
4	5SL–W0057–00	.PISTON COMPLETO PINZA	1					
5	5SL–W0047–00	..JUEGO DE RETENES DE PINZA	1					
6	5SL–25917–00	.FUNDA DE CALIBRE	1					
7	5SL–25838–00	.CASQUILLO DE CALIBRE	1					
8	5SL–25919–00	.SOPORTE DE PASTILLAS	1					
9	5SL–25914–00	.PASADOR	1					
10	39P–25921–50	.MENSULA DE SOPORTE	1					
11	3JD–25917–00	.FUNDA DE CALIBRE	1					
12	5VX–W0046–00	.JUEGO DE PASTILLAS DE FRENO 2	1					
13	8CR–25924–00	.PASADOR	1					
14	5DH–25916–00	.TAPON	1					
15	5SL–25926–00	.PERNO	1					
16	1UY–W0048–00	.CJTO TORNILLO DE PURGA	1					
17	5SL–25827–00	.CUNA DE CALIBRE	1					
18	5SL–25827–10	.CUNA DE CALIBRE	1					
19	5SL–25828–01	.CUNA DE CALIBRE	2					

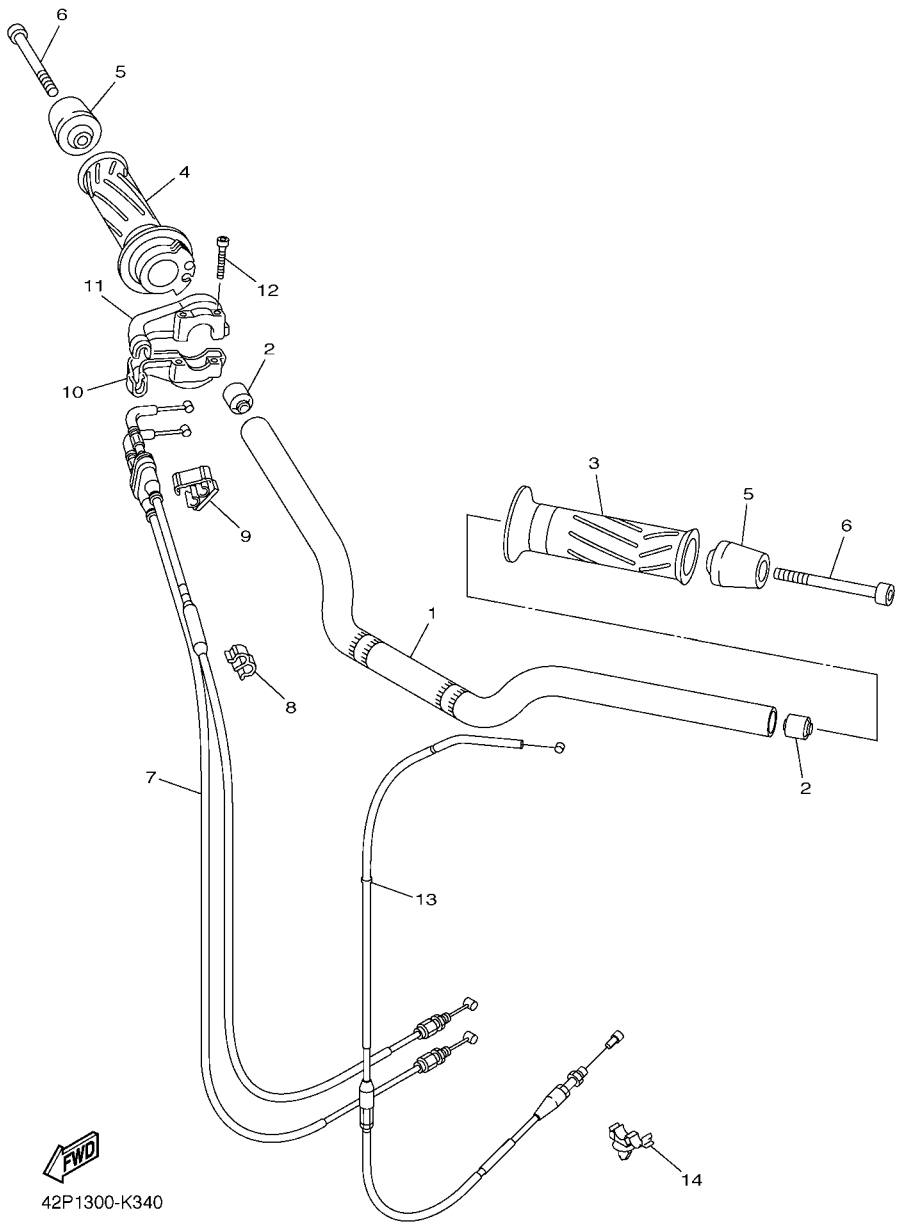

FIG. 34 MANILLAR & CABLE

REF. Nº	CODIGO Nº	DESCRIPCION	42PG					OBSERVACIONES
1	39P–26111–00	MANUBRIO	1					
2	4JH–23434–00	SOPORTE DE AMORTIGUADOR	2					
3	4YR–26241–02	EMPUNADURA (IZQUIERDO)	1					
4	4YR–26240–02	EMPUNADURA COMPLETA	1					
5	39P–26246–00	EXTREMO DE EMPUNADURA	2					
6	91317–06050	PERNO	2					
7	39P–26302–00	CABLE DE ACELERADOR COMPLETO	1					
8	90468–15139	PRESILLA	1					
9	39P–2627E–00	GRAMPA	1					
10	4KG–26281–00	TAPA DE EMPUNADURA SUPERIOR	1					
11	3XW–26282–01	TAPA, EMPUNADURA INFERIOR	1					
12	91317–05035	PERNO	2					
13	3C3–26335–00	CABLE DE EMBRAGUE	1					
14	90464–10008	BRIDA	1					

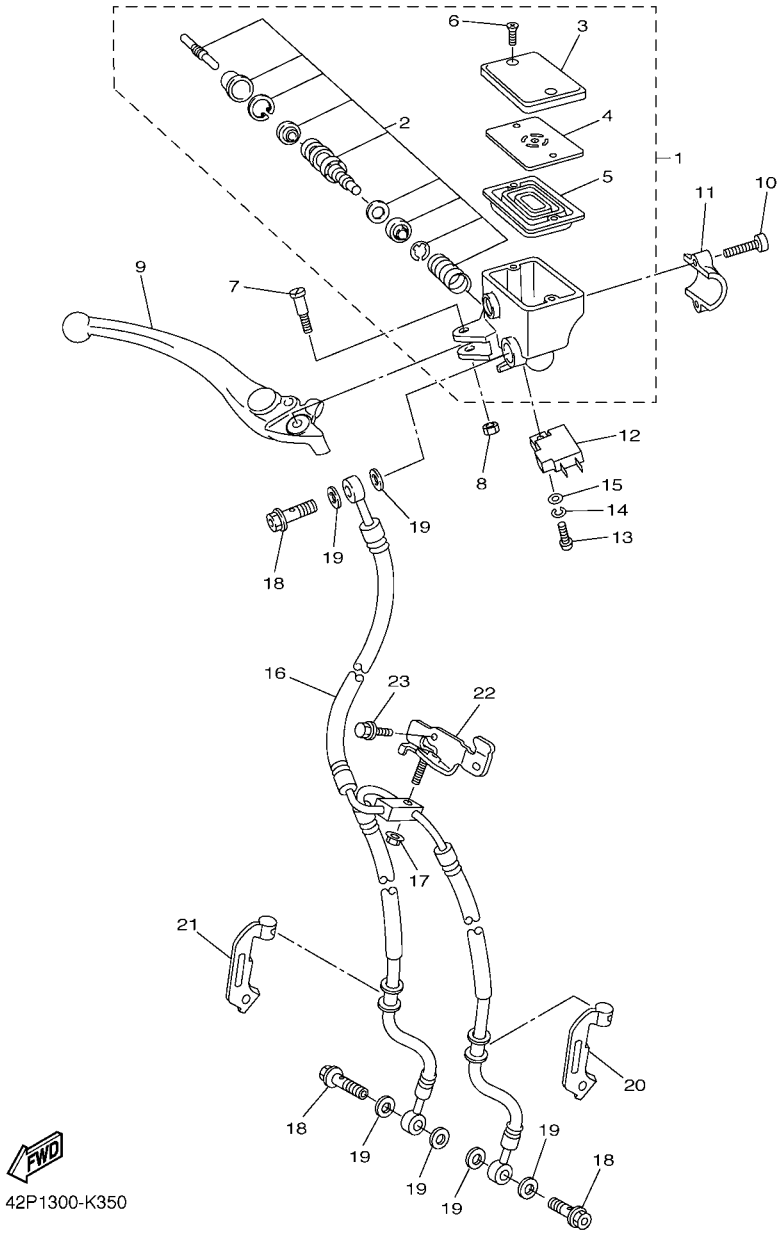

FIG. 35 CILINDRO MAESTRO DELANTERO

REF. Nº	CODIGO Nº	DESCRIPCION	42PG					OBSERVACIONES
1	3C3–W2587–00	CILINDRO MAESTRO SUB COMPLET	1					
2	2D1–W0041–00	.JUEGO DE CILINDRO MAESTRO	1					
3	5VS–25852–00	.TAPA DE TANQUE DE RESERVA	1					
4	5VS–25855–00	.BUJE DE DIAFRAGMA	1					
5	20S–25854–00	.EMPAQUE,DIAFRAGMA	1					
6	5VS–2589H–00	.TORNILLO	2					
7	5VS–2589F–00	PERNO DE PALANCA	1					
8	95617–06100	TUERCA U	1					
9	5VS–83922–00	PALANCA 2	1					
10	5VS–26332–00	PERNO	2					
11	5VS–25867–00	SOPORTE DE CILINDRO MAESTRO	1					
12	4HM–83980–00	INTERRUP. DE PARADA DELANTERO	1					
13	98502–04012	TORNILLO	1					
14	92902–04100	ARANDELA	1					
15	92902–04600	ARANDELA	1					
16	39P–25872–00	MANGUERA DE FRENO 1	1					
17	95702–06500	TUERCA DE BRIDA	1					
18	90401–10020	PERNO DE UNION	3					
19	90430–10005	JUNTA	6					
20	2D1–25875–00	SOPORTE DE MANGUERA FRENO 1	1					
21	2D1–25876–00	SOPORTE DE MANGUERA FRENO 2	1					
22	42P–23378–00	SOPORTE DE BOCINA	1					
23	95802–06014	TORNILLO DE REBORDE	2					

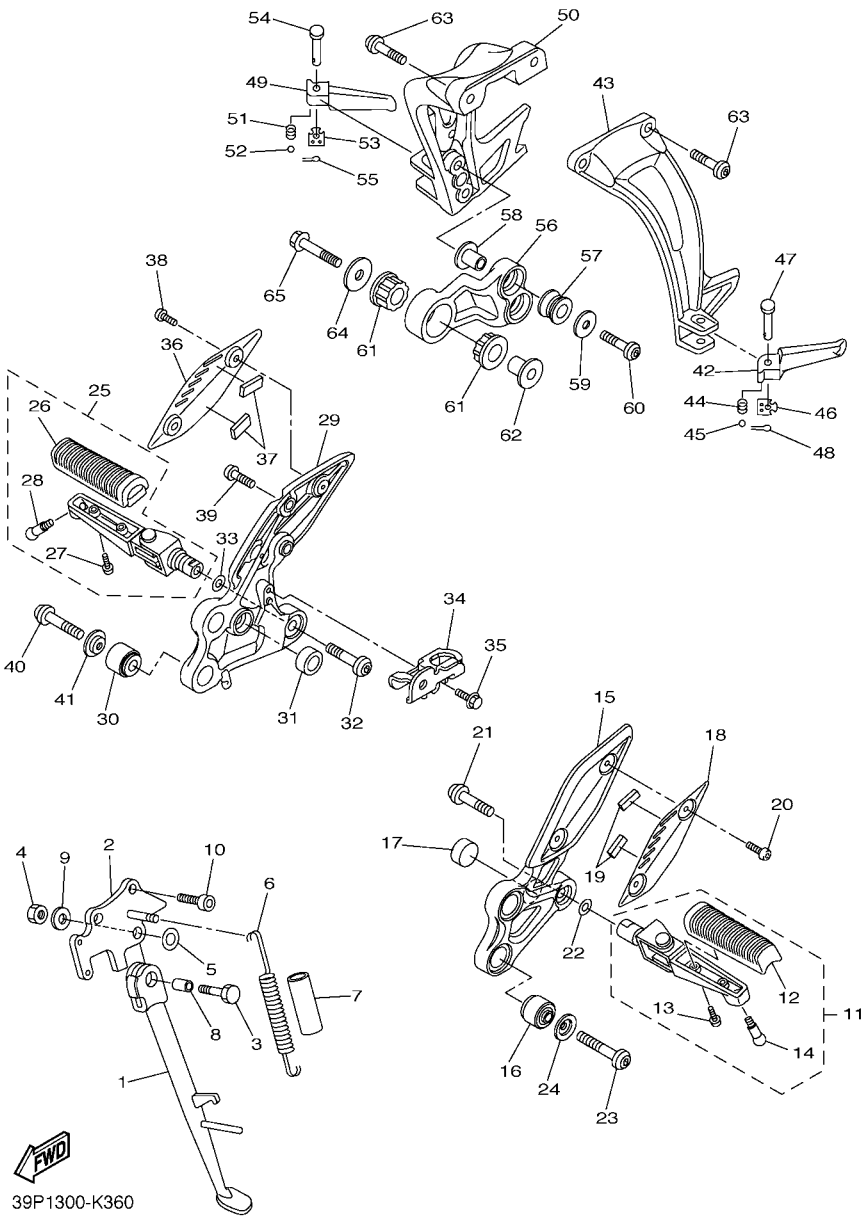

FIG. 36 SOPORTE & APOYAPIE

REF. Nº	CODIGO Nº	DESCRIPCION	42PG					OBSERVACIONES
1	39P–27311–00	PUNTAL LATERAL	1					
2	2D1–27321–00	SOPORTE DE PUNTAL LATERAL	1					
3	90101–10025	TORNILLO	1					
4	90185–10023	TUERCA AUTOBLOCANTE	1					
5	90201–16027	ARANDELA PLANA	1					
6	90506–18020	RESORTE DE TENSION	1					
7	90445–19002	TUBO (L60)	1					
8	90387–10050	ESPACIADOR	1					
9	90201–10035	ARANDELA PLANA	1					
10	90110–10028	TORNILLO ALLEN	2					
11	39P–27410–00	APOYAPIE DELANTERO (MI)	1					
12	4BP–27413–00	.CUBIERTA DE APOYAPIE	1					
13	90157–05025	.TORNILLO CABEZA CONICA PLANA	2					
14	90109–08203	.PERNO	1					
15	39P–27442–00	SOPORTE 2	1					
16	1NL–27424–00	AMORTIGUADOR DE APOYAPIE 2	2					
17	5VX–27114–00	TOPE DE PUNTAL PRINCIPAL	1					
18	39P–27486–00	CUBIERTA 1	1					
19	1HX–27415–00	PLACA	2					
20	90111–05015	TORNILLO	2					
21	90111–10039	TORNILLO	1					
22	90206–17084	ARANDELA ONDULADA	1					
23	90110–08071	TORNILLO ALLEN	2					
24	90209–08295	ARANDELA DE SEPARACION	2					
25	39P–27420–00	APOYAPIE DELANTERO (MD)	1					
26	4BP–27413–00	.CUBIERTA DE APOYAPIE	1					
27	90157–05025	.TORNILLO CABEZA CONICA PLANA	2					

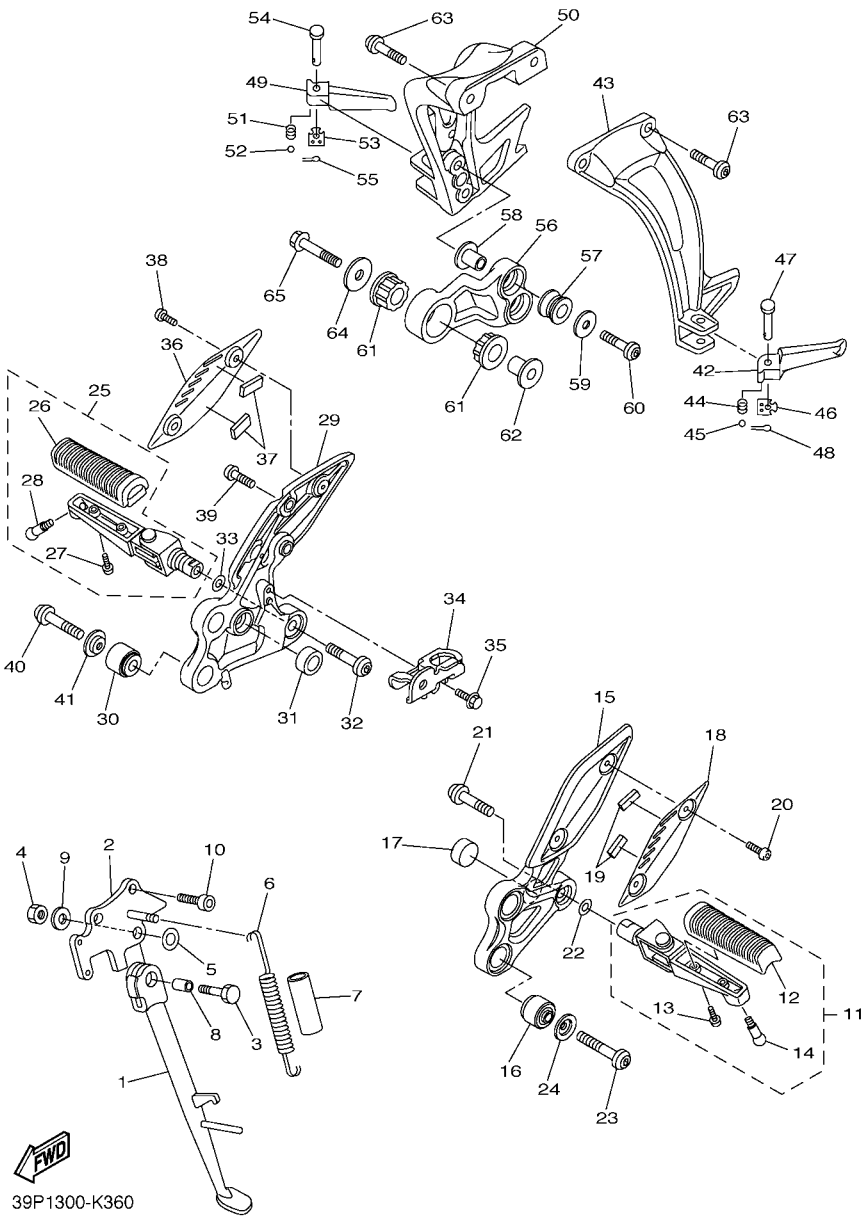

FIG. 36 SOPORTE & APOYAPIE

REF. Nº	CODIGO Nº	DESCRIPCION	42PG					OBSERVACIONES
28	90109–08203	.PERNO	1					
29	39P–27443–00	SOPORTE 3	1					
30	1NL–27424–00	AMORTIGUADOR DE APOYAPIE 2	2					
31	5VX–27114–00	TOPE DE PUNTAL PRINCIPAL	1					
32	90111–10039	TORNILLO	1					
33	90206–17084	ARANDELA ONDULADA	1					
34	39P–2144G–00	SOPORTE DE INTERRUPTOR	1					
35	95802–06008	TORNILLO DE REBORDE	1					
36	39P–27487–00	CUBIERTA 2	1					
37	1HX–27415–00	PLACA	2					
38	90111–05015	TORNILLO	2					
39	92017–08020	PERNO	2					
40	90110–08071	TORNILLO ALLEN	2					
41	90209–08295	ARANDELA DE SEPARACION	2					
42	3VR–27431–01	APOYAPIE POSTERIOR 1	1					
43	2D1–2741L–10	MENSULA 4	1					
44	90501–12743	RESORTE DE COMPRESION	1					
45	93501–04011	BOLA	1					
46	5VX–27437–00	ARANDELA ESPECIAL	1					
47	91702–08040	PASADOR DE ADRAZADERA	1					
48	91401–25015	CHAVETA	1					
49	3VR–27441–01	APOYAPIE POSTERIOR 2	1					
50	39P–2742L–00	MENSULA 5	1					
51	90501–12743	RESORTE DE COMPRESION	1					
52	93501–04011	BOLA	1					
53	5VX–27437–00	ARANDELA ESPECIAL	1					
54	91702–08040	PASADOR DE ADRAZADERA	1					

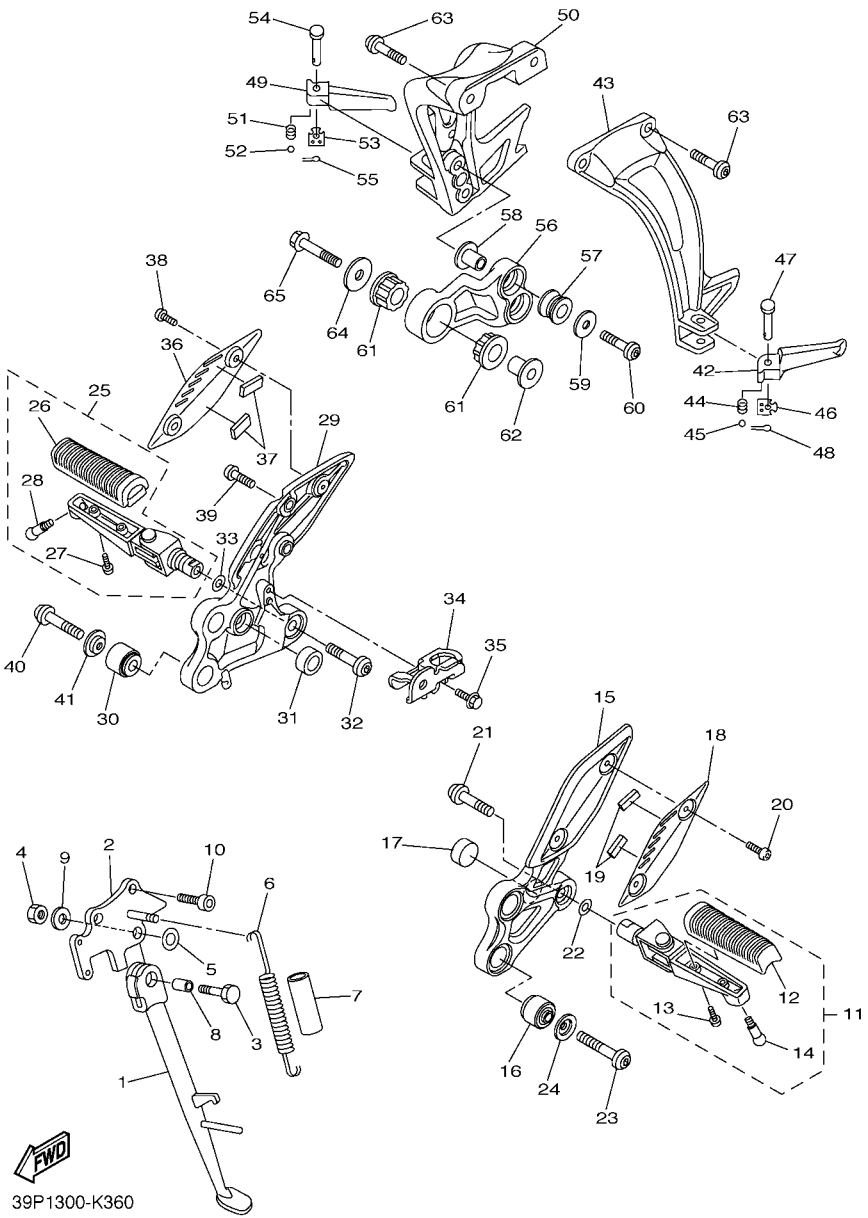

FIG. 36 SOPORTE & APOYAPIE

REF. Nº	CODIGO Nº	DESCRIPCION	42PG					OBSERVACIONES
55	91401–25015	CHAVETA	1					
56	39P–21436–00	SOPORTE	1					
57	5BE–14747–00	AMORTIGUADOR DE SILENCIADOR	2					
58	90387–08021	ESPACIADOR	2					
59	90201–08054	ARANDELA PLANA	2					
60	92012–08035	PERNO	2					
61	39P–27424–00	AMORTIGUADOR DE APOYAPIE 2	2					
62	90387–10097	ESPACIADOR	1					
63	90109–085G6	PERNO	4					
64	90201–10073	ARANDELA PLANA	1					
65	90105–10158	TORNILLO	1					

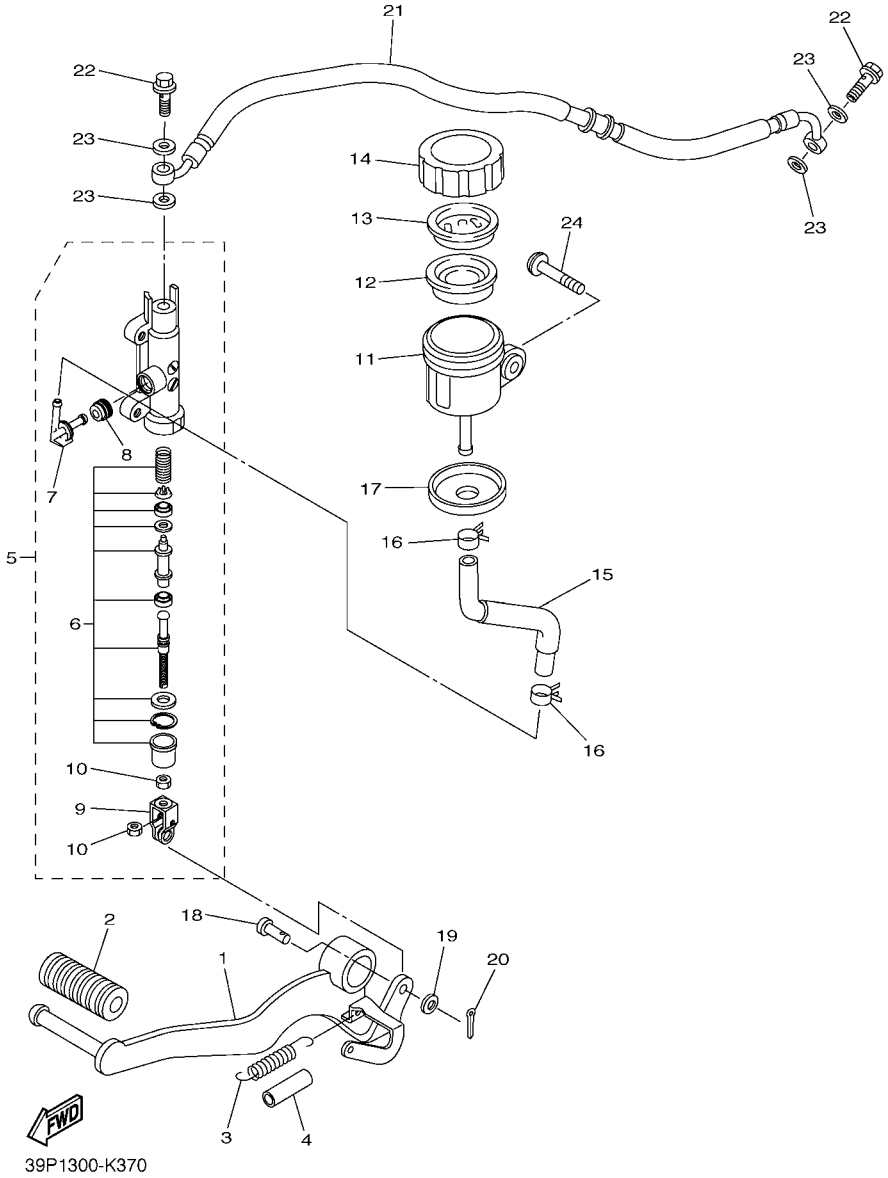

FIG. 37 CILINDRO MAESTRO TRASERO

REF. Nº	CODIGO Nº	DESCRIPCION	42PG					OBSERVACIONES
1	39P–27211–00	PEDAL DE FRENO	1					
2	5EB–18113–00	FUNDA DEL PEDAL DEL CAMBIO	1					
3	90506–20014	RESORTE DE TENSION	1					
4	90446–15386	TUBO RESEIRADERO	1					
5	2D1–2583V–00	CILINDRO, MAESTRO TRASERO	1					
6	5VX–W0042–51	.JUEGO DE CILINDRO MAESTRO	1					
7	2D1–2582A–00	.CONECTOR	1					
8	4BP–2585F–01	.ANILLO O	1					
9	4BP–27222–02	.UNION	1					
10	90170–08010	.TUERCA	2					
11	2D1–25894–00	TANQUE DE RESERVA	1					
12	5SL–25854–00	DIAFRAGMA TANQUE RESERVA	1					
13	5SL–25855–00	BUJE DE DIAFRAGMA	1					
14	5SL–25852–00	TAPA DE TANQUE DE RESERVA	1					
15	39P–25895–00	MANGUERA DE TANQUE DE RESERVA	1					
16	90467–11044	PRESILLA	2					
17	5D0–2583H–00	FUNDA	1					
18	90240–08005	PASADOR CON HOYO	1					
19	90201–08066	ARANDELA PLANA	1					
20	91401–20012	CHAVETA	1					
21	39P–25874–00	MANGUERA DE FRENO	1					
22	90401–10020	PERNO DE UNION	2					
23	90430–10005	JUNTA	4					
24	90111–05026	TORNILLO	1					

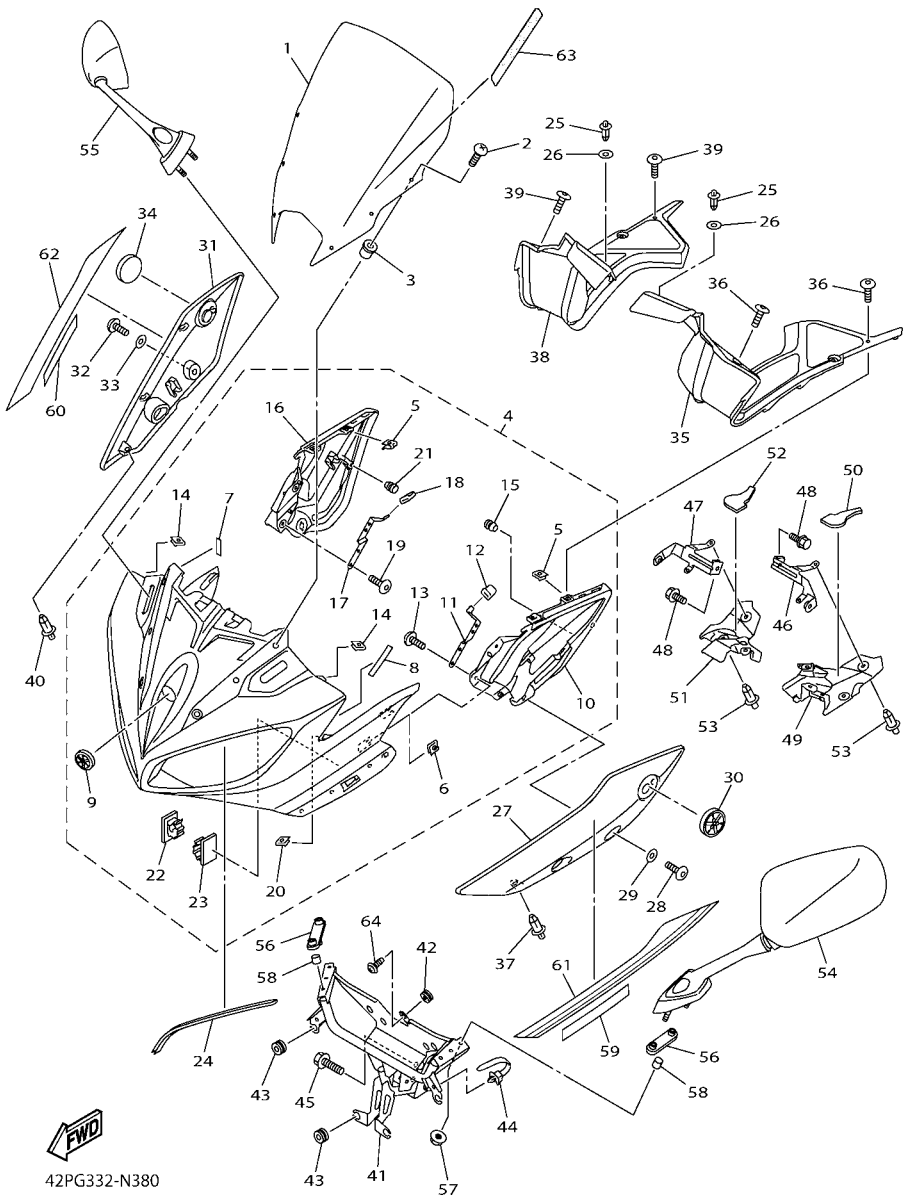

FIG. 38 BOVEDA

REF. Nº	CODIGO Nº	DESCRIPCION	42PG					OBSERVACIONES
1	42P–28381–00	PARABRISA	1					
2	90150–05023	TORNILLO CABEZA REDONDA	6					
3	90179–05523	TUERCA	6					
4	42P–W283G–00–P4	CARROCERIA DELANT SUP 1	1					DNMN
5	90183–05076	.TUERCA DE RESORTE	4					
6	90183–05042	.TUERCA DE RESORTE	4					
7	5PS–2178A–00	.ETIQUETA DE ACEITE	2					
8	2C0–2173T–00	.CINTA 1	2					
9	4KN–2836B–10	.MARCA	1					
10	42P–2842N–00–P4	.CUBIERTA 2	1					DNMN
11	42P–2836F–10	.MENSULA 3	1					
12	5PW–2411J–01	.AMORTIGUADOR, DE CUBIERTA LAT	1					
13	97702–50016	.TORNILLO ROSCA HEMBRA	2					
14	90183–05076	.TUERCA DE RESORTE	2					
15	90338–06018	.TAPON	1					
16	42P–2843J–00–P4	.CUBIERTA 3	1					DNMN
17	42P–2836G–10	.MENSULA 4	1					
18	5PW–2411J–01	.AMORTIGUADOR, DE CUBIERTA LAT	1					
19	97702–50016	.TORNILLO ROSCA HEMBRA	2					
20	90183–05076	.TUERCA DE RESORTE	2					
21	90338–06018	.TAPON	1					
22	90464–13005	.BRIDA	1					
23	90464–20014	.BRIDA	1					
24	5VX–28376–00	ADORNO	2					
25	90269–06008	REMACHE	2					
26	90202–06004	ARANDELA DE PLANA	2					
27	42P–2844J–00–P3	CUBIERTA 4	1					MBL2

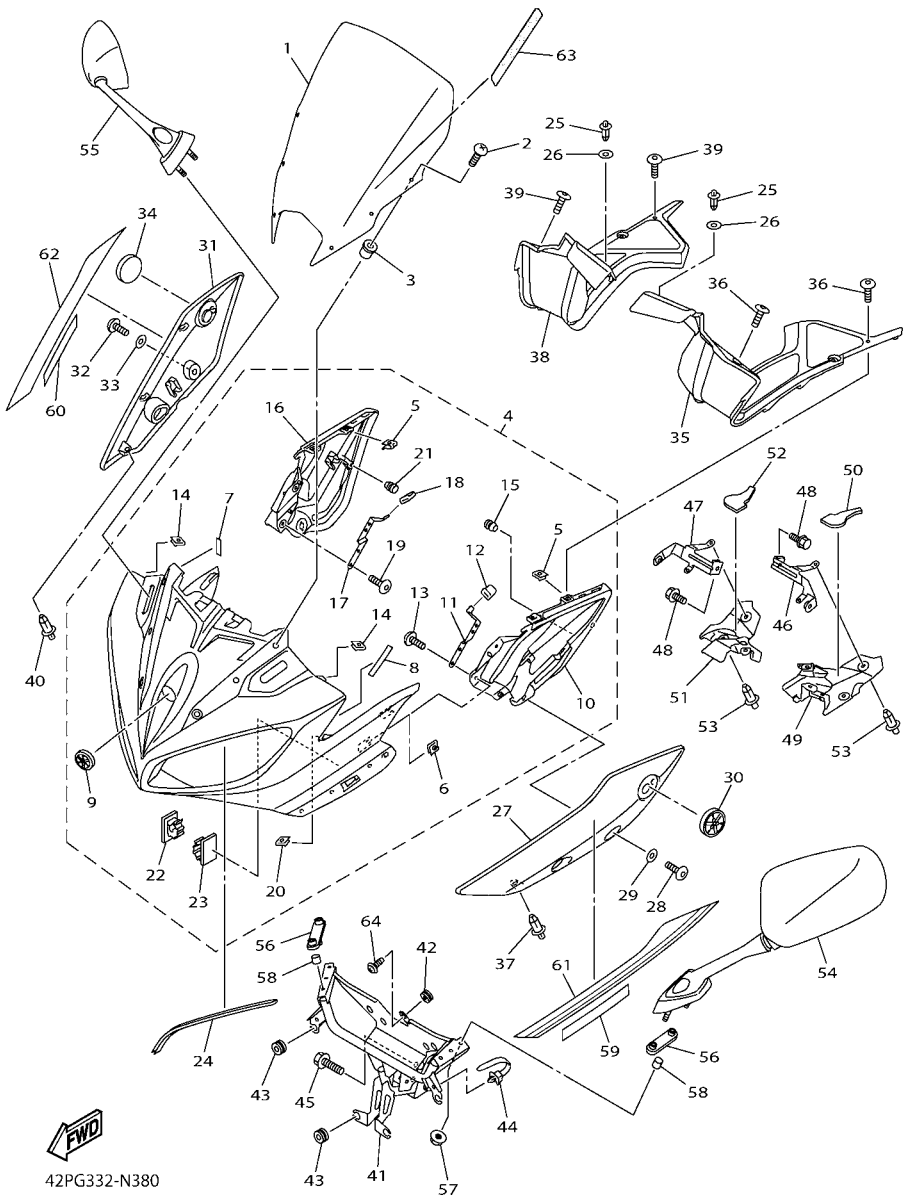

FIG. 38 BOVEDA

REF. Nº	CODIGO Nº	DESCRIPCION	42PG					OBSERVACIONES
28	90110–06200	TORNILLO ALLEN	1					
29	90202–06170	ARANDELA DE PLANA	1					
30	5SL–2413B–00	EMBLEMA	1					
31	42P–2842A–00–P3	CUBIERTA 5	1					MBL2
32	90110–06200	TORNILLO ALLEN	1					
33	90202–06170	ARANDELA DE PLANA	1					
34	5SL–2413B–00	EMBLEMA	1					
35	42P–2836K–00	PANEL 1	1					
36	90111–05002	TORNILLO	4					
37	90269–06008	REMACHE	1					
38	42P–2836L–00	PANEL 2	1					
39	90111–05002	TORNILLO	4					
40	90269–06008	REMACHE	1					
41	42P–28356–00	SOPORTE 1	1					
42	3C3–83513–00	AMORTIGUADOR	3					
43	90480–14229	TAPON	4					
44	90464–12089	BRIDA	2					
45	95822–08035	TORNILLO DE REBORDE	2					
46	42P–2836A–00	SOPORTE 1	1					
47	42P–2836E–00	SOPORTE 2	1					
48	95802–06010	TORNILLO DE REBORDE	2					
49	42P–2835U–00	PANEL 1	1					
50	42P–2834E–00	AMORTIGUADOR 1	1					
51	42P–2835V–00	PANEL 2	1					
52	42P–2834F–00	AMORTIGUADOR	1					
53	90269–06008	REMACHE	6					
54	42P–26280–00	ESPEJO COMPLETO (IZQUIERDO)	1					

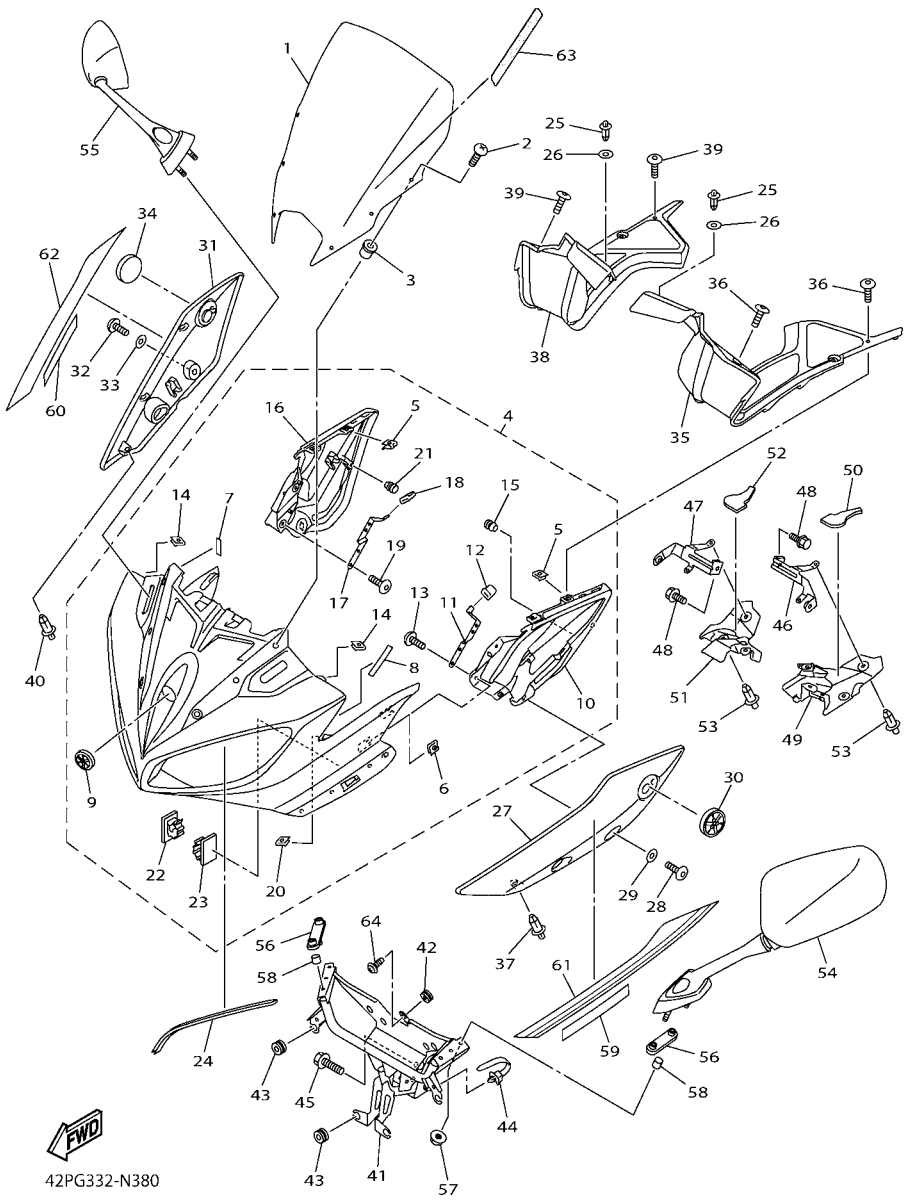

FIG. 38 BOVEDA

REF. Nº	CODIGO Nº	DESCRIPCION	42PG					OBSERVACIONES
55	42P–26290–00	ESPEJO COMPLETO (DERECHO)	1					
56	3C3–26298–00	PLACA DE ESPEJO 1	2					
57	95702–06500	TUERCA DE BRIDA	4					
58	90387–064T3	ESPACIADOR	4					
59	42P–28315–60	EMBLEMA	1					
60	42P–28315–60	EMBLEMA	1					
61	42P–28391–10	CALCOMANIA 1	1					
62	42P–28392–10	CALCOMANIA 2	1					
63	42P–28338–00	EMBLEMA	1					
64	90164–05001	TORNILLO ROSCA HEMBRA	3					

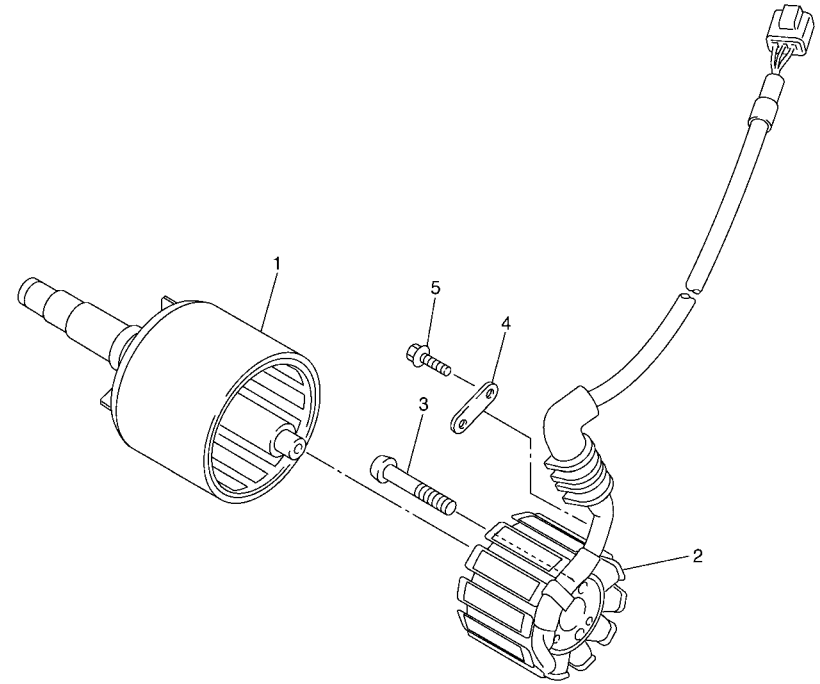

5VY1300-C400

FIG. 39 GENERADOR

REF. Nº	CODIGO Nº	DESCRIPCION	42PG					OBSERVACIONES
1	5VY–81450–00	ROTOR COMPLETO	1					
2	2D1–81410–10	ESTATOR COMPLETO	1					
3	90149–06067	TORNILLO DE REGLAJE	3					
4	4C8–15191–00	PLACA	1					
5	90105–06078	TORNILLO	1					

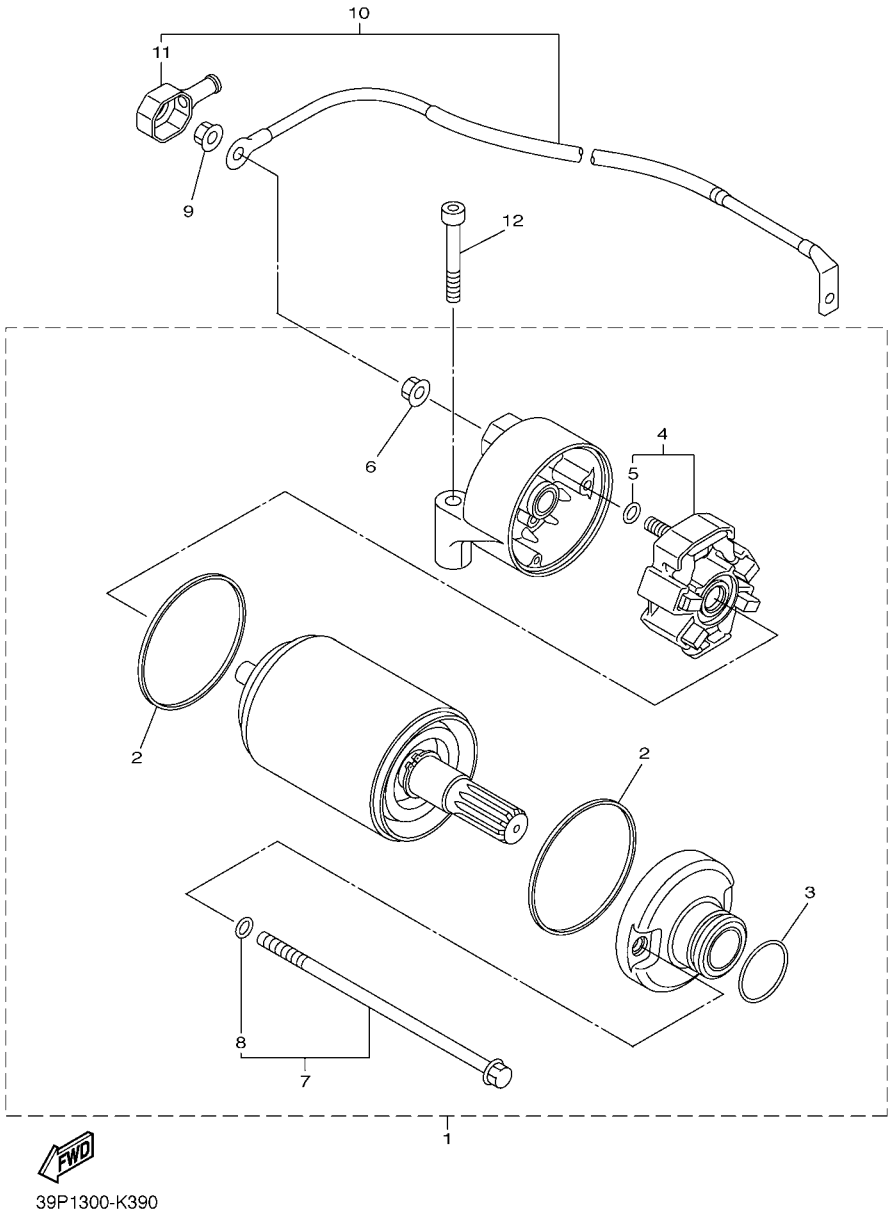

FIG. 40 MOTOR DE ARRANQUE

REF. Nº	CODIGO Nº	DESCRIPCION	42PG					OBSERVACIONES
1	39P–81800–00	MOTOR DE ARRANQUE COMPLETO	1					
2	11H–81844–00	.EMPAQUE	2					
3	1FK–81847–00	.ANILLO GOMA	1					
4	4B5–81840–00	.SOSTEN DE ESCOBILLA COMPLETO	1					
5	3TB–81847–00	..ANILLO GOMA	1					
6	4XV–8182A–00	.TUERCA	1					
7	28P–81826–00	.PERNO	2					
8	3TB–81847–00	..ANILLO GOMA	1					
9	4XV–8182A–00	TUERCA	1					
10	39P–81815–00	CABLE, MOTOR DE ARRANQUE	1					
11	4B5–81871–00	.TAPA	1					
12	91312–06040	TORNILLO	2					

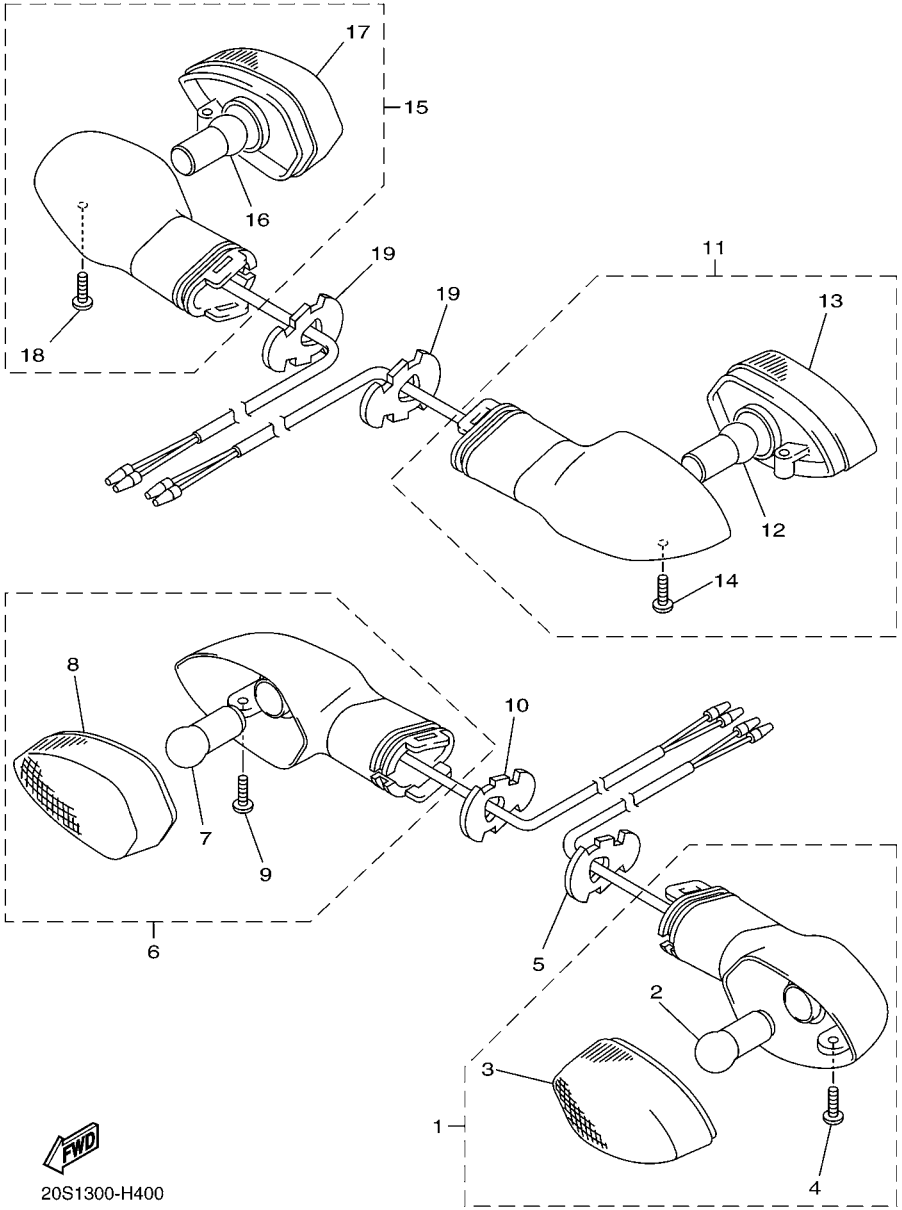

FIG. 41 LUZ DE DESTELLADOR

REF. Nº	CODIGO Nº	DESCRIPCION	42PG					OBSERVACIONES
1	20S–83310–20	DESTELLADOR DE LUZ DELANT.	1					
2	1KB–83311–00	.BOMBILLA (12V-10W)	1					
3	1KB–H333A–00	.LENTES COMPLETO 1	1					
4	3D9–H3333–10	.TORNILLO ACCESORIO DE LENTE	1					
5	3D7–83318–10	SOPORTE DE DESTELLADOR 1	1					
6	20S–83320–20	DESTELLADOR DE LUZ DELANT.	1					
7	1KB–83311–00	.BOMBILLA (12V-10W)	1					
8	1KB–H334A–00	.LENTES COMPLETO 2	1					
9	3D9–H3333–10	.TORNILLO ACCESORIO DE LENTE	1					
10	3D7–83318–10	SOPORTE DE DESTELLADOR 1	1					
11	39P–83330–20	DESTELLADOR DE LUZ TRAS.COMPL.	1					
12	1KB–83311–00	.BOMBILLA (12V-10W)	1					
13	1KB–8334A–00	.LENTES COMPLETO 2	1					
14	3D9–H3333–10	.TORNILLO ACCESORIO DE LENTE	1					
15	39P–83340–20	DESTELLADOR DE LUZ TRAS.COMPL.	1					
16	1KB–83311–00	.BOMBILLA (12V-10W)	1					
17	1KB–8333A–00	.LENTES COMPLETO 1	1					
18	3D9–H3333–10	.TORNILLO ACCESORIO DE LENTE	1					
19	3D7–83318–10	SOPORTE DE DESTELLADOR 1	2					

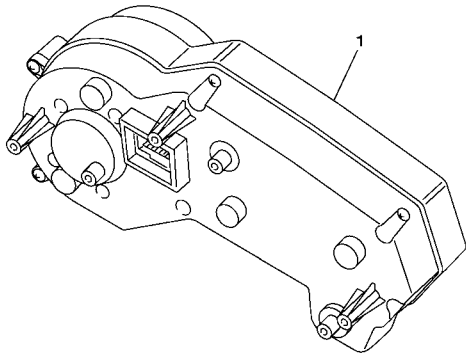

42P1300-K420

FIG. 42 MEDIDOR

REF. Nº	CODIGO Nº	DESCRIPCION	42PG					OBSERVACIONES
1	39P–83500–00	METRO COMPLETO (KM/H)	1					

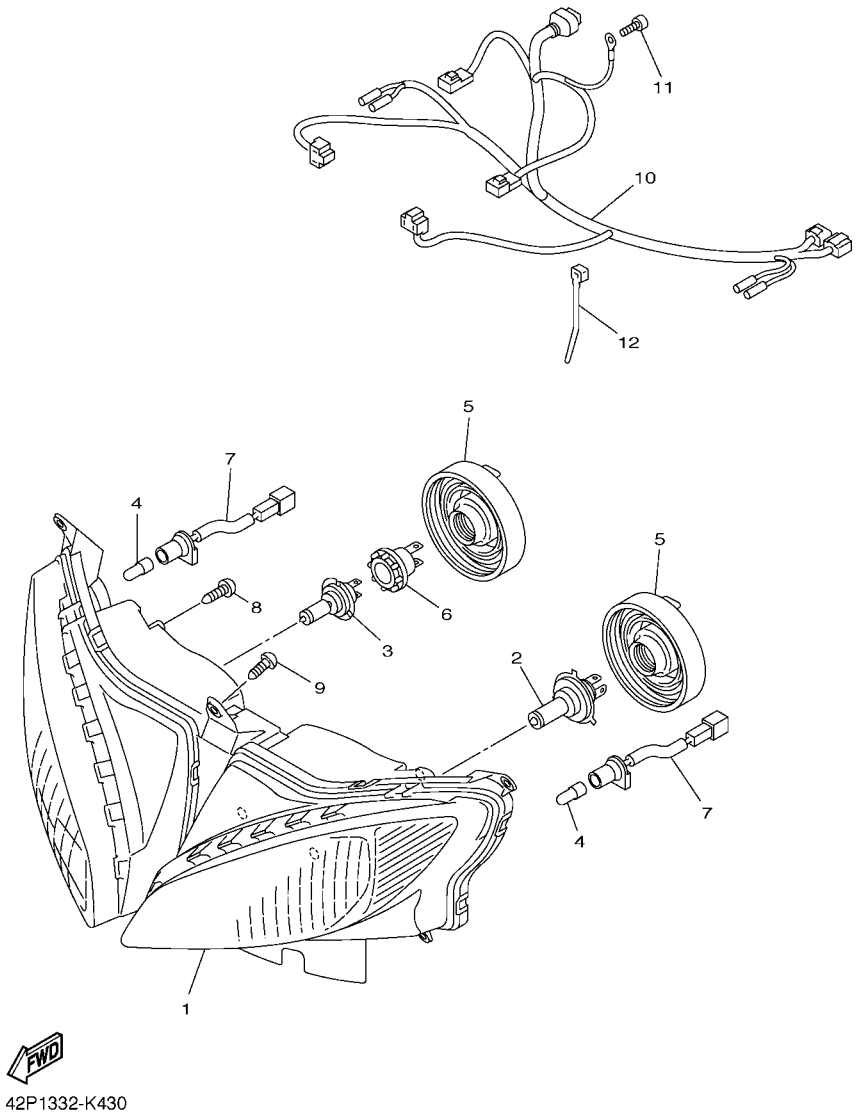

FIG. 43 FARO DELANTERO

REF. Nº	CODIGO Nº	DESCRIPCION	42PG					OBSERVACIONES
1	5VX–84310–00	UNIDAD DE FARO DELANTERO COMPL	1					
2	8G9–84314–00	BOMBILLA (12V-60/55W)	1					(H4)HALOGEN
3	4SV–84314–00	BOMBILLA (12V-55W)	1					(H7)HALOGEN
4	4SV–84347–00	BOMBILLA (12V-5W)	2					
5	5LV–84397–00	CUBIERTA DE ENCASTRE	2					
6	4SV–84350–00	ENCASTRE DE CABLE COMPLETO	1					
7	5VX–84312–00	CABLE COMPLETA	2					
8	90164–05001	TORNILLO ROSCA HEMBRA	4					
9	97702–50016	TORNILLO ROSCA HEMBRA	5					
10	42P–84359–00	CABLE DE FARO DELANTERO	1					
11	91380–05008	PERNO	1					
12	90465–10098	BRIDA	2					

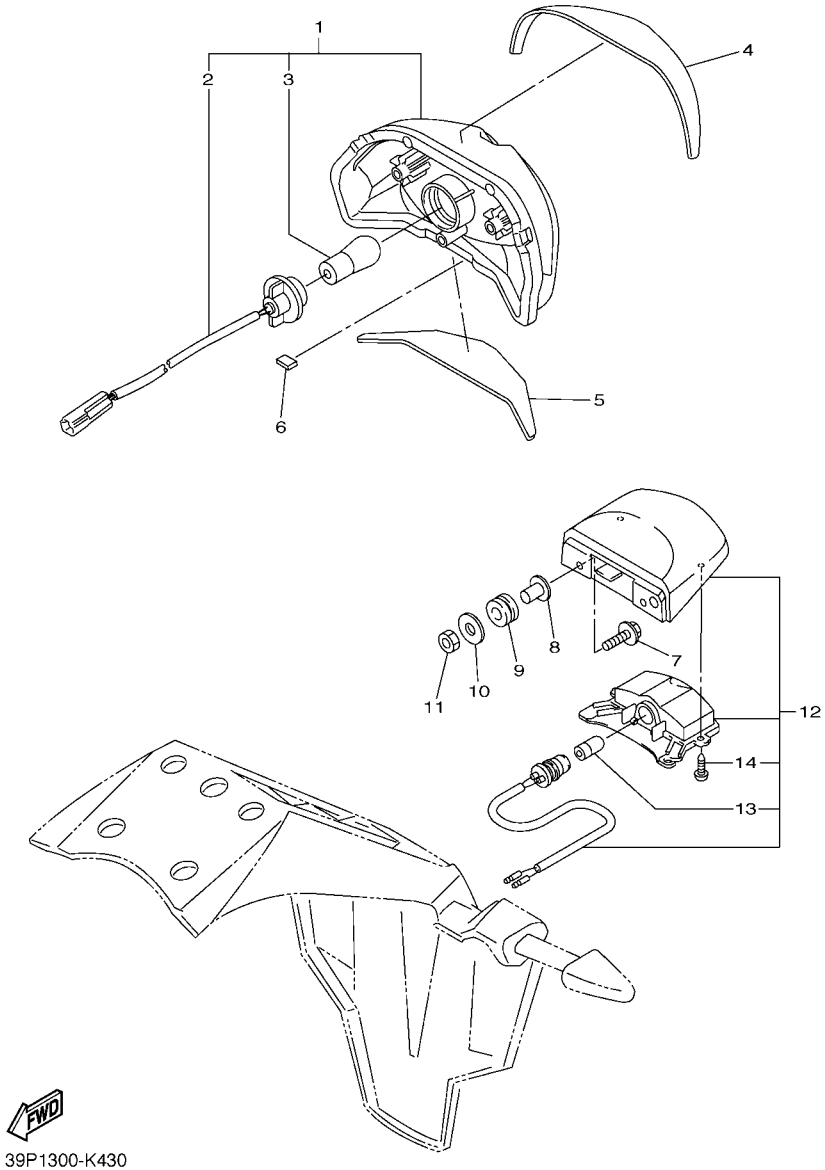

FIG. 44 LUZ DE COLA

REF. Nº	CODIGO Nº	DESCRIPCION	42PG					OBSERVACIONES
1	39P–84710–00	UNIDAD FARO TRASERO COMPL.	1					
2	39P–84735–00	.CABLE COMPLETA	1					
3	1A2–84714–41	.AMPOLLETA (12V-21/5W)	1					
4	3C3–84736–00	AMORTIGUADOR DE COLA	1					
5	2D1–84737–00	AMORTIGUADOR, TRASERO 2	1					
6	90520–01002	EQUILIBRIO, CUBIERTA	2					
7	90159–05035	TORNILLO CON VALONA	2					
8	90387–05042	ESPACIADOR	2					
9	90480–11009	TAPON	2					
10	92902–05200	ARANDELA	2					
11	95602–05100	TUERCA U	2					
12	2D1–84745–00	UNIDAD DE LUZ DE LICENCIA COMP	1					
13	4HC–84744–00	.BOMBILLA (12V-5W)	1					
14	97706–04012	.TORNILLO, ROSCA CHAPA	2					

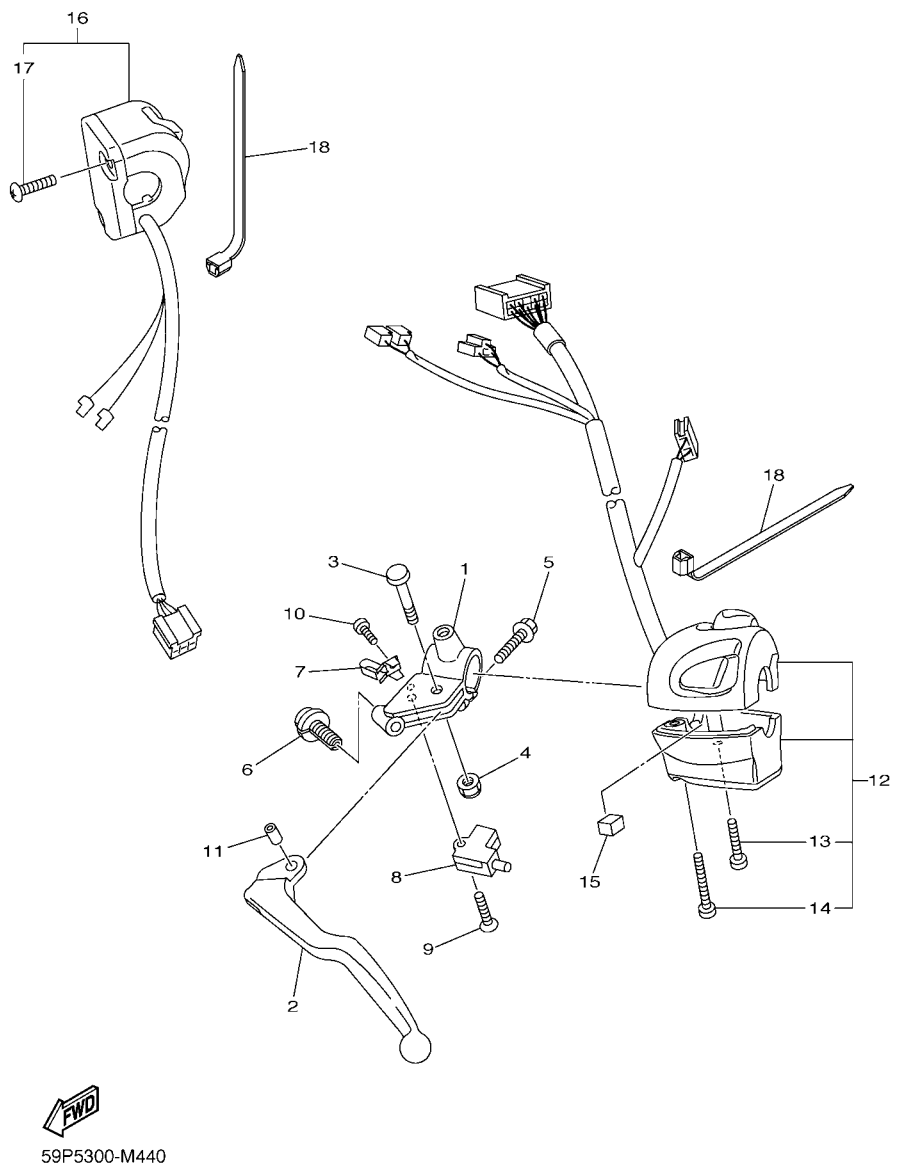

FIG. 45 INTERRUPTOR DE MANILLAR&PALANC

REF. Nº	CODIGO Nº	DESCRIPCION	42PG					OBSERVACIONES
1	4XV–82911–10	SOPORTE DE LEVA 1	1					
2	5EB–83912–03	PALANCA 1	1					
3	2C0–83945–00	PERNO DE PALANCA	1					
4	95607–06200	TUERCA DE AUTO-CIERRE	1					
5	95027–06020	PERNO, DE BRIDA	1					
6	5LV–83951–00	PERNO DE CABLE DE AJUSTE	1					
7	4XV–83929–00	PLACA DE RESORTE	1					
8	3YX–82917–01	INTERRUPTOR	1					
9	98704–03020	TORNILLO DE CABEZA PLANA	1					
10	98507–04010	TORNILLO DE CABEZA PLANA	1					
11	5JJ–83913–00	COLLAR DE PALANCA 1	1					
12	39P–83969–00	INTERRUPTOR DE MANIJA 5	1					
13	98507–05030	.TORNILLO DE CABEZA PLANA	1					
14	98507–05045	.TORNILLO DE CABEZA PLANA	1					
15	90520–10010	EQUILIBRIO, CUBIERTA	1					
16	39P–83975–00	INTERRUPTOR DE MANIJA 2	1					
17	98507–05022	.TORNILLO DE CABEZA PLANA	2					
18	90464–13073	BRIDA	2					

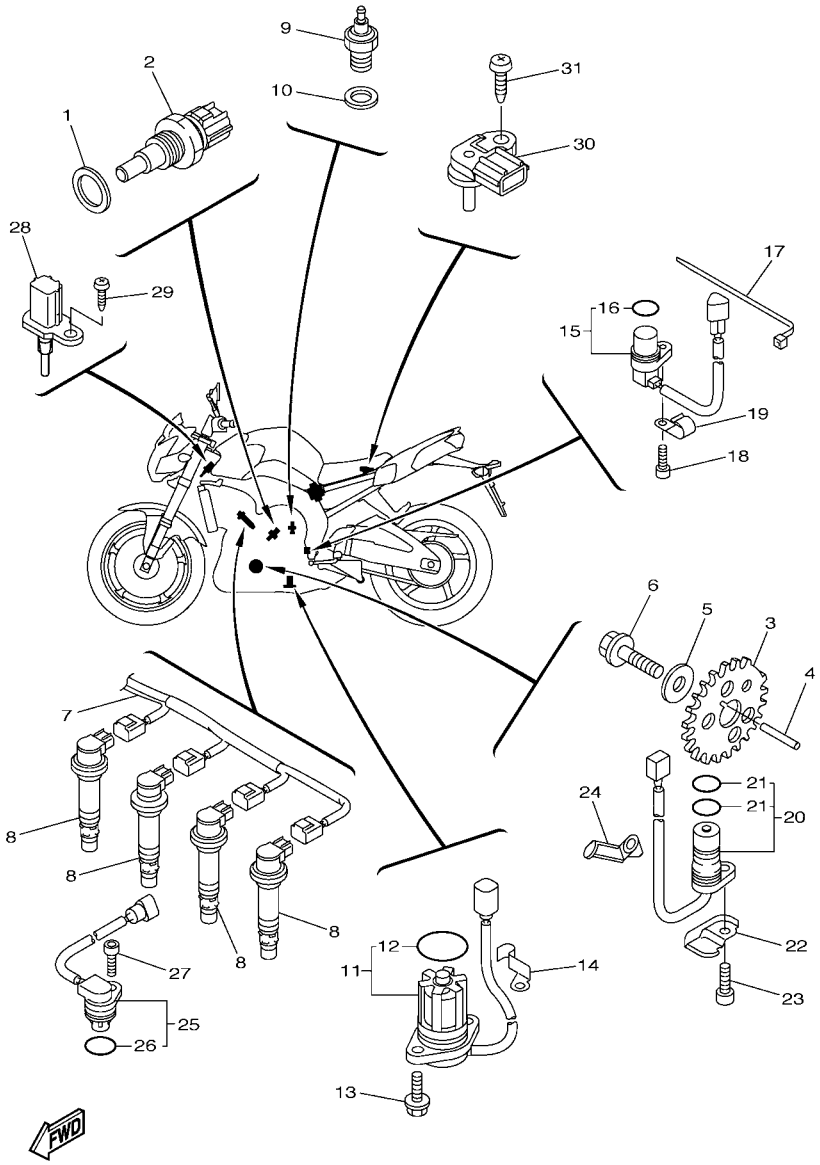

FIG. 46 EQUIPO ELECTRICO 1

REF. Nº	CODIGO Nº	DESCRIPCION	42PG					OBSERVACIONES
1	90201–12790	ARANDELA PLANA	1					
2	5YP–85790–00	TERMICA SENSORIO	1					
3	2D1–81673–00	ROTOR	1					
4	90282–03001	CHAVETA, RECTA	1					
5	90201–10039	ARANDELA PLANA	1					
6	90105–10290	TORNILLO	1					
7	39P–82309–00	CABLE SUBCONDUCTOR	1					
8	39P–82310–10	BOBINA DE ENCENDIDO COMPLETA	4					
9	3GB–82540–01	INTERRUPTOR NEUTRAL COMPL	1					
10	90430–10148	JUNTA	1					
11	5VY–85720–00	MEDIDOR DE NIVEL DE ACEITE	1					
12	5VY–8A8E0–00	.ANILLO O	1					
13	95022–06016	PERNO, DE BRIDA	2					
14	90465–08053	BRIDA	1					
15	4XV–83755–03	SENSOR DE VELOCIDAD	1					
16	4D9–81168–00	.ANILLO O	1					
17	90464–51001	BRIDA	1					
18	90110–06161	TORNILLO ALLEN	1					
19	90462–08057	BRIDA	1					
20	23P–81670–00	RECOGEDOR COMPL.	1					
21	5VY–8A8E1–00	.ANILLO-O	2					
22	23P–15589–00	PLACA	1					
23	90110–06161	TORNILLO ALLEN	1					
24	90465–08054	BRIDA	1					
25	5VY–85896–01	SENSOR DE LEVA	1					
26	4D9–81168–00	.ANILLO O	1					
27	90110–06175	TORNILLO ALLEN	1					

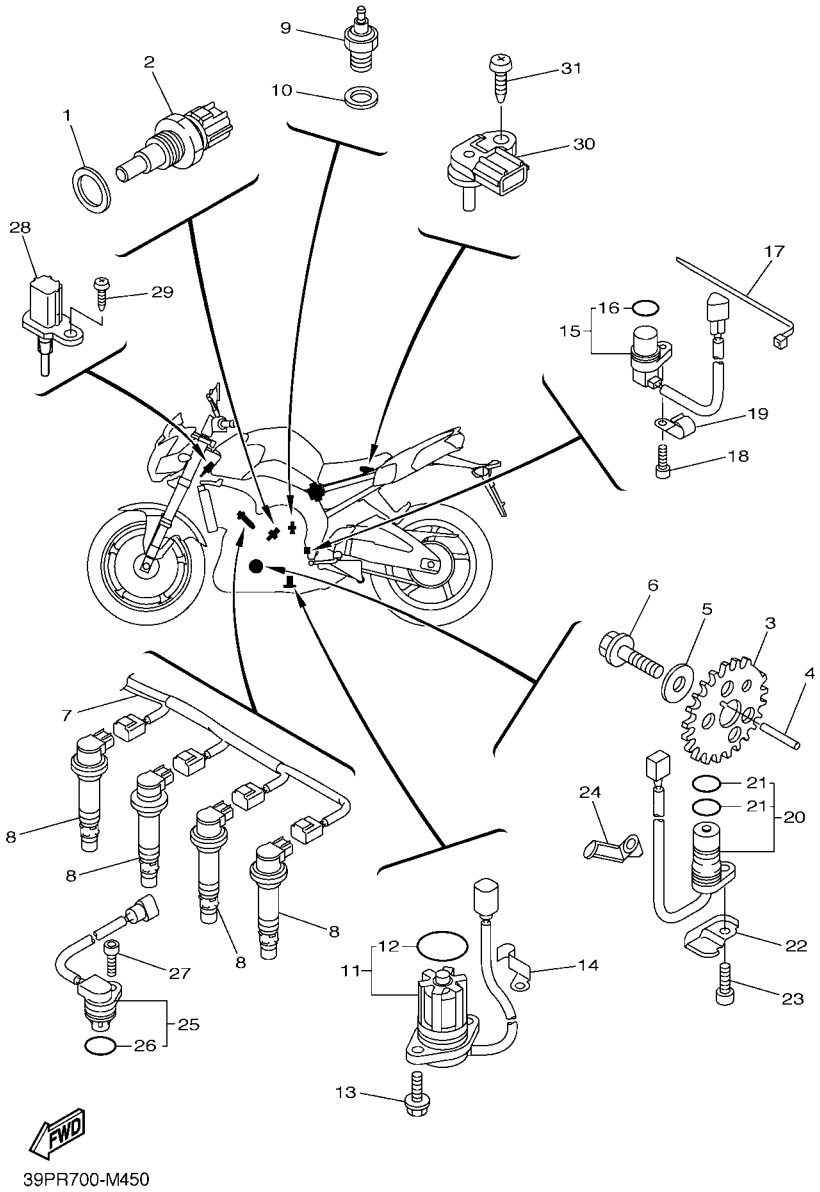

FIG. 46 EQUIPO ELECTRICO 1

REF. Nº	CODIGO Nº	DESCRIPCION	42PG					OBSERVACIONES
28	5YU–85886–00	SENSOR	1					
29	97702–50520	TORNILLO ROSCA HEMBRA	1					
30	5S7–82380–00	SENSOR DE PRESION	1					
31	97702–60520	TORNILLO ROSCA HEMBRA	1					

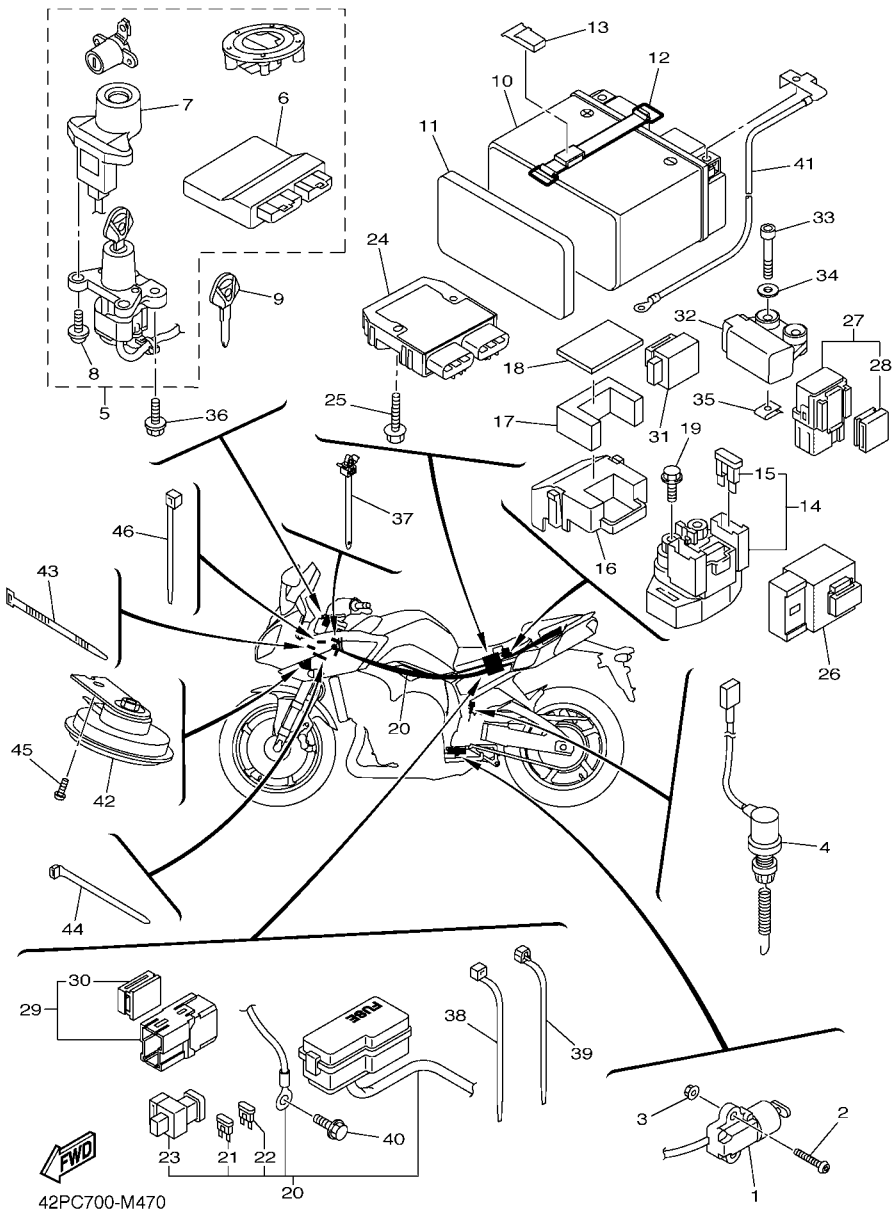

FIG. 47 EQUIPO ELECTRICO 2

REF. Nº	CODIGO Nº	DESCRIPCION	42PG					OBSERVACIONES
1	23P–82566–60	INTERRUPTOR	1					
2	92012–05030	PERNO	2					
3	95602–05200	TUERCA DE AUTO-CIERRE	2					
4	39P–82530–00	INTERRUPTOR DE PARADA COMPLETO	1					
5	39P–W8250–20	JUEGO DE INMOVILIZADOR	1					
6	39P–8591A–40	.UNIDAD CONTROL	1					
7	39P–8255P–00	.UNIDAD INMOVILIZADORA	1					
8	5SL–82113–01	.TORNILLO	2					
9	5SL–82511–08	BLANK KEY	1					AP
10	5VY–82100–00	BATERIA COMPLETA(YUASA YTZ10S)	1					
11	39P–8246K–00	SEPARADOR	1					
12	2D1–82131–00	TIRANTE DE BATERIA	1					
13	5YU–2162A–00	GANCHO	1					
14	2C0–81940–00	ARRANCADOR RELEVO (RC19-054)	1					
15	36Y–82151–00	.FUSIBLE (15A-BL)	2					
16	5SL–82119–10	CUBIERTA DE CABLE CONDUCTOR	1					
17	39P–82176–00	AMORTIGUADOR	1					
18	39P–82157–00	AMORTIGUADOR	1					
19	95022–06008	PERNO, DE BRIDA	2					
20	42P–82590–20	CONJUNTO DE CABLES	1					
21	5JJ–82151–10	.FUSIBLE (15A-BL)	3					
22	5JJ–82151–30	.FUSIBLE (10A-BL)	6					
23	5JW–82151–10	.FUSIBLE (50A)	1					
24	1D7–81960–01	RECTIFICADOR Y REGULADOR	1					
25	95822–06025	TORNILLO DE REBORDE	2					
26	5VK–81950–40	RELE COMPLETO (5VK-40)	1					
27	1ST–81950–00	RELE COMPLETO (1ST-00)	1					

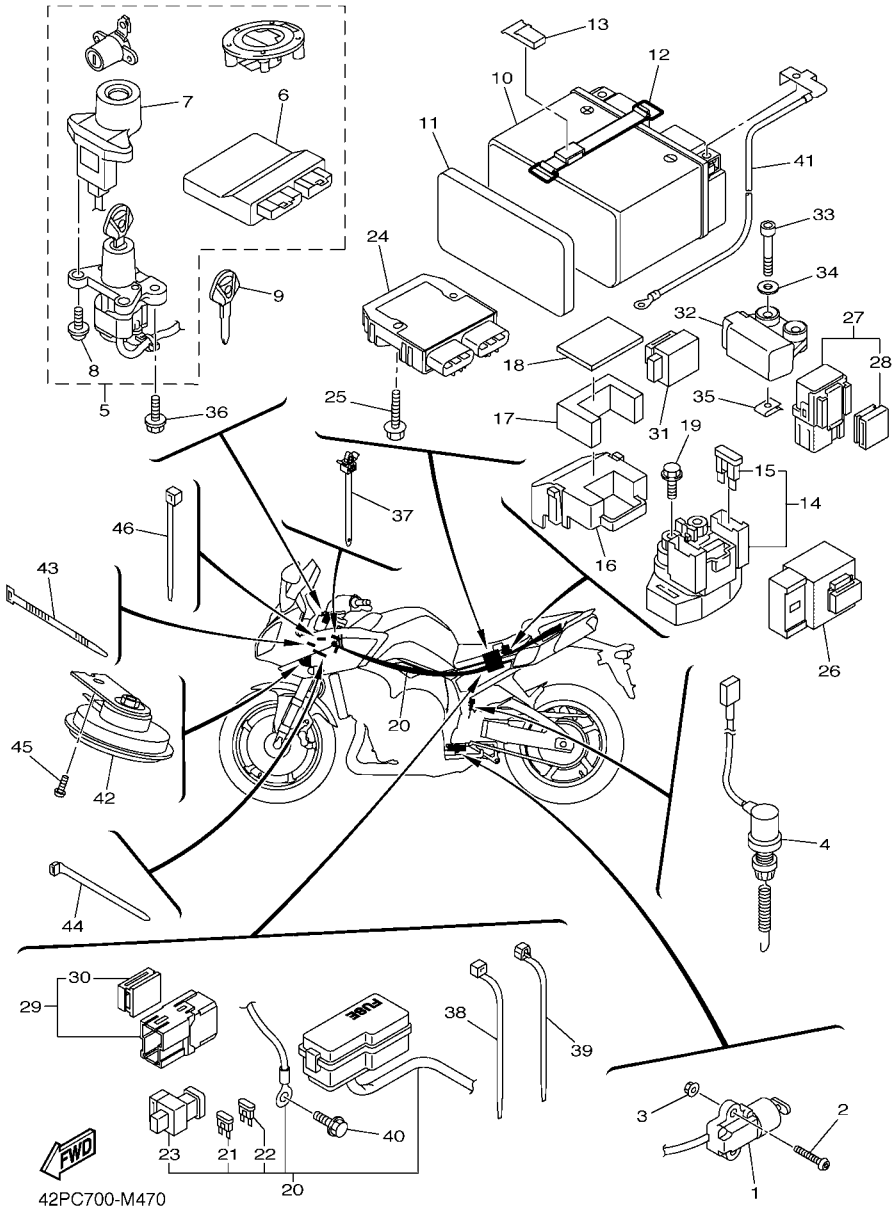

FIG. 47 EQUIPO ELECTRICO 2

REF. Nº	CODIGO Nº	DESCRIPCION	42PG					OBSERVACIONES
28	5JJ–81952–00	.SOSTEN DE RELE	1					
29	1ST–81950–00	RELE COMPLETO (1ST-00)	1					
30	5JJ–81952–00	.SOSTEN DE RELE	1					
31	4GY–83350–00	RELE DE DESTELLADOR COMPL.	1					
32	5PS–82576–01	SENSOR ANGULO DE INCLINATION	1					
33	91312–04025	TORNILLO	2					
34	90201–04030	ARANDELA PLANA	2					
35	90183–04039	TUERCA DE RESORTE	2					
36	90109–08195	PERNO	2					
37	90464–12036	BRIDA	1					
38	90464–13073	BRIDA	3					
39	90464–15195	BRIDA	2					
40	91380–06010	PERNO	1					
41	2D1–82116–00	CABLE CONDUCTOR NEGATIVO	1					
42	42P–83371–00	BOCINA	1					
43	90465–10098	BRIDA	1					
44	90464–59001	BRIDA	1					
45	92012–06014	PERNO	1					
46	90464–16061	BRIDA	1					

CODIGO Nº	REF. Nº
2D1–11026–00	1 – 28
39P–11101–09	1 – 1
5VY–1111G–00	1 – 26
20S–11134–10	1 – 2
5VY–11165–00	15 – 30
39P–11181–00	1 – 17
39P–11191–00	1 – 18
4C8–11193–00	1 – 20
214–11198–01	9 – 7
39P–11311–00	2 – 1
5VY–11351–00	2 – 2
4C8–11411–00	3 – 1
5VY–11416–00	3 – 6
5VY–11416–10	3 – 6
5VY–11416–20	3 – 6
5VY–11416–30	3 – 6
5VY–11416–A0	3 – 6
5VY–11445–00	16 – 8
5VY–11478–00	16 – 4
2D1–11537–10	16 – 1
39P–11549–00	3 – 5
39P–11603–00	3 – 8
39P–11631–00	3 – 7
39P–11633–00	3 – 10
14B–11650–00	3 – 2
5VY–11654–01	3 – 3
2D1–11656–00	3 – 4
2D1–11656–10	3 – 4
2D1–11656–20	3 – 4
2D1–11656–30	3 – 4
39P–12111–00	4 – 1
39P–12113–00	4 – 4
1HX–12118–00	4 – 6
39P–12119–00	4 – 7
39P–12121–00	4 – 2
5EB–12126–00	4 – 3
5EB–12127–00	4 – 5
5EB–12153–09	4 – 9
5EB–12153–10	4 – 9
1HX–12168–00	4 – 8
1HX–12168–20	4 – 8
1HX–12168–40	4 – 8
1HX–12168–60	4 – 8
1HX–12168–80	4 – 8
1HX–12168–A0	4 – 8
1HX–12168–F0	4 – 8
1HX–12168–H1	4 – 8
1HX–12168–K1	4 – 8

CODIGO Nº	REF. Nº
1HX–12168–M1	4 – 8
1HX–12168–R1	4 – 8
1HX–12168–U1	4 – 8
1HX–12168–W1	4 – 8
1HX–12168–Y1	4 – 8
1HX–12169–11	4 – 8
1HX–12169–31	4 – 8
1HX–12169–50	4 – 8
1HX–12169–70	4 – 8
1HX–12169–90	4 – 8
1HX–12169–E0	4 – 8
1HX–12169–G0	4 – 8
1HX–12169–J0	4 – 8
1HX–12169–L0	4 – 8
1HX–12169–N0	4 – 8
1HX–12169–T0	4 – 8
39P–12170–00	5 – 1
20S–12176–00	5 – 3
39P–12180–00	5 – 2
39P–12210–01	5 – 6
2D1–12213–00	5 – 7
5BE–12241–00	1 – 19
4C8–12251–00	5 – 9
4C8–12252–00	5 – 10
5VY–12277–00	27 – 15
	27 – 30
2D1–12405–01	7 – 24
39P–12405–10	7 – 25
39P–1240J–00	7 – 41
2D1–12410–00	7 – 3
5LP–12411–00	7 – 4
4C8–12420–21	6 – 6
5VY–12422–00	6 – 13
5VK–12438–00	6 – 9
4XV–12439–00	6 – 11
5VY–1243A–00	7 – 17
39P–1243E–00	7 – 21
39P–1243F–00	7 – 11
5VY–12443–10	15 – 47
2D1–1244G–00	7 – 18
4C8–12450–10	6 – 10
2D1–12461–00	7 – 28
22W–12462–00	7 – 29
39P–12464–00	7 – 33
14B–12469–10	6 – 1
5GV–1246A–00	7 – 14
39P–12481–00	6 – 28
2D1–12484–01	6 – 35

CODIGO Nº	REF. Nº
4XV–12485–00	6 – 26
5VY–12485–10	7 – 7
1AA–12535–00	7 – 26
2D1–12551–00	7 – 36
39P–12576–00	6 – 2
39P–12578–00	7 – 13
5VY–12579–00	7 – 8
5VY–12588–00	6 – 31
39P–12589–00	7 – 38
39P–12637–00	7 – 1
2D1–12675–00	7 – 27
5FL–12822–00	9 – 15
5VY–13117–10	8 – 5
5VY–13161–00	9 – 12
5VY–1316E–00	8 – 10
5VY–13310–10	6 – 16
5VY–13336–00	6 – 18
5VY–13354–00	17 – 32
5VY–13355–00	6 – 20
39P–13400–00	9 – 5
5VY–13410–00	8 – 2
4C8–13414–00	9 – 9
5VY–13416–00	8 – 7
39P–13418–00	14 – 5
5GH–13440–50	9 – 2
39P–13470–00	9 – 14
5JW–13473–00	9 – 17
5EB–13475–00	9 – 16
5VY–13490–00	9 – 3
69J–13532–00	11 – 11
8FP–13556–00	11 – 4
14B–13573–00	11 – 15
39P–13595–00	10 – 2
39P–13596–00	10 – 4
39P–13750–20	11 – 1
39P–13761–00	11 – 2
39P–13795–00	11 – 33
5VY–13898–00	8 – 13
39P–13907–00	28 – 12
39P–1393A–00	11 – 10
39P–13971–00	28 – 40
5JW–14104–00	11 – 22
39P–14137–00	11 – 16
39P–14147–00	11 – 34
5PS–14147–00	11 – 3
39P–14148–00	10 – 16
39P–14149–00	10 – 18
5VX–14149–00	11 – 17

CODIGO Nº	REF. Nº
363–14198–00	11 – 14
2C0–14216–00	11 – 7
5FL–14216–00	11 – 20
8CC–14216–10	11 – 12
3XV–14251–00	11 – 24
5PW–14251–00	11 – 5
5FL–14348–10	11 – 28
5JW–14349–00	11 – 21
5JW–14349–10	11 – 25
8FP–14349–20	11 – 26
39P–14396–00	11 – 32
2D1–14409–00	10 – 20
39P–1440B–00	10 – 24
39P–1440C–00	10 – 26
39P–14411–00	10 – 6
39P–14413–00	15 – 50
39P–14421–00	10 – 7
39P–14425–00	10 – 22
39P–14426–00	10 – 23
2D1–14451–00	10 – 8
2D1–14452–00	10 – 9
39P–14457–00	10 – 11
2D1–14462–00	10 – 10
2D1–14498–00	10 – 12
39P–14503–00	11 – 23
5YP–14561–00	11 – 6
5VX–14565–00	11 – 18
39P–14592–00	11 – 36
39P–14610–10	13 – 1
4FM–14613–00	13 – 3
39P–14710–20	13 – 6
5YU–14714–10	13 – 7
39P–14715–00	13 – 8
39P–14718–20	13 – 10
5JW–14723–00	12 – 7
5BE–14747–00	36 – 57
39P–14807–00	11 – 29
5VY–1482K–00	1 – 21
2D1–14840–00	12 – 1
5VY–14881–00	12 – 2
5VY–14882–00	12 – 3
39P–14883–00	12 – 5
5SL–14890–10	1 – 22
5VY–14899–01	1 – 23
31H–14987–00	11 – 31
39P–14987–00	11 – 30
4C8–15100–10	14 – 1
39P–15113–00	15 – 33

CODIGO Nº	REF. Nº
5EB–15155–00	14 – 2
5VY–15163–00	18 – 10
5VY–15164–00	15 – 4
36Y–15189–00	15 – 42
4H7–15189–00	15 – 44
5PX–15189–00	15 – 8
4C8–15191–00	39 – 4
5VY–15316–00	14 – 20
5PW–15361–00	14 – 19
3F9–15362–10	15 – 17
39P–15393–00	10 – 14
5VY–15411–00	15 – 1
2D1–15413–10	15 – 36
2D1–15416–00	15 – 23
2D1–15418–00	15 – 14
2D1–15421–00	15 – 16
4C8–15431–00	15 – 39
39P–15441–00	15 – 32
2D1–15451–10	15 – 10
4C8–15456–00	15 – 28
4C8–15461–00	15 – 19
4C8–15462–00	15 – 37
5VY–15515–00	16 – 7
5VY–15517–00	16 – 12
5VY–15521–00	16 – 13
5VY–15542–00	15 – 5
5VY–15570–00	16 – 5
5VY–15586–00	16 – 6
23P–15589–00	46 – 22
5VY–16150–00	17 – 7
5VY–16154–00	17 – 8
5VY–16155–00	16 – 2
5VY–16164–00	17 – 30
5VY–16181–00	17 – 31
5VY–16321–00	17 – 15
5VY–16325–00	17 – 13
	17 – 16
5VY–16330–00	17 – 17
5VY–16331–00	17 – 12
5VY–16340–00	17 – 26
132–16346–00	20 – 2
5VY–16351–00	17 – 18
4XV–16356–01	17 – 25
39P–16370–01	17 – 9
2D1–16382–00	17 – 1
5VY–16383–00	17 – 11
5VY–16384–00	17 – 10
4X7–16385–00	17 – 14

CODIGO Nº	REF. Nº
39P–17121–00	18 – 9
39P–17131–00	18 – 6
39P–17151–00	18 – 3
39P–17161–00	18 – 8
39P–17211–00	18 – 32
39P–17221–00	18 – 21
5VY–17231–00	18 – 29
39P–17241–00	18 – 26
39P–17251–00	18 – 30
39P–17261–00	18 – 24
4C8–17402–00	18 – 17
39P–17411–00	18 – 1
5VY–17442–00	18 – 19
5VY–17446–00	18 – 15
5PS–17460–00	18 – 35
2D1–18101–01	20 – 10
39P–18110–00	20 – 15
39P–18112–00	20 – 13
5EB–18113–00	20 – 16
	37 – 2
39P–18115–00	20 – 17
5VX–18116–00	20 – 20
5VY–18127–10	20 – 5
5VY–18140–00	20 – 3
5VY–18144–00	20 – 1
5VX–18154–00	20 – 21
2D1–18511–00	19 – 4
39P–18512–00	19 – 5
5VY–18513–01	19 – 6
5VY–18531–00	19 – 7
5VY–18535–00	19 – 8
5VY–18536–00	19 – 10
5VY–18540–00	19 – 1
136–18542–00	19 – 2
5VY–18562–00	19 – 11
2D1–21110–03–P0	21 – 1
39P–2117E–00	22 – 20
2D1–2117G–00	21 – 19
4XV–2117K–00	29 – 27
39P–2117N–00	21 – 14
39P–21190–00	21 – 3
39P–21287–00	21 – 25
39P–21349–00	29 – 7
4XV–21376–00	22 – 13
39P–21436–00	36 – 56
39P–2144G–00	36 – 34
4RR–21485–00	28 – 29
4C8–21495–00	21 – 10

CODIGO Nº	REF. Nº
4C8–21495–00	21 – 13
5PW–21511–01–PH	22 – 1
1CA–21568–00	28 – 42
39P–21575–00	21 – 34
39P–21611–00	22 – 29
2D1–21629–00	22 – 31
5YU–2162A–00	47 – 13
5YU–21639–00	21 – 27
39P–2163A–00	22 – 18
2D1–21646–00	22 – 14
2D1–21650–00	24 – 32
42P–21651–00–P4	22 – 15
14B–21668–00	24 – 41
2D1–21688–02	22 – 32
2D1–216A2–00	22 – 10
2D1–216A3–00	22 – 11
39P–21711–00	23 – 1
2D1–21719–00	23 – 7
39P–2171A–10–P6	28 – 22
39P–21721–00	23 – 3
2C0–2173T–00	38 – 8
39P–2174X–00	23 – 2
	23 – 4
5PW–2174X–00	22 – 16
2D1–2174Y–00	21 – 16
5PS–2178A–00	38 – 7
26H–21828–00	23 – 10
2D1–21871–00	23 – 8
5VY–21875–00	23 – 9
2D1–2197E–00	21 – 2
39P–22110–00	24 – 1
2D1–22117–00	24 – 18
5JJ–22128–00	24 – 8
39P–22141–00	24 – 29
2D1–22151–00	24 – 12
2D1–2217A–10	24 – 19
2D1–2217M–00	24 – 20
39P–22184–00	24 – 5
39P–22210–30	25 – 1
5SL–22311–00	24 – 36
39P–23102–30	27 – 1
39P–23103–30	27 – 16
39P–23110–00	27 – 7
39P–23111–50	27 – 14
39P–23111–60	27 – 29
5VY–23118–00	27 – 12
	27 – 27
39P–23120–10	27 – 22

CODIGO Nº	REF. Nº
4KM–23123–01	27 – 34
39P–23136–00	27 – 2
	27 – 17
39P–23141–10	27 – 11
	27 – 26
4PU–23144–00	27 – 6
	27 – 21
4PU–23145–01	27 – 4
	27 – 19
4V4–23146–L0	27 – 3
	27 – 18
4V4–23153–L0	27 – 5
	27 – 20
509–23158–L0	27 – 9
	27 – 24
39P–23170–20	27 – 8
39P–23170–30	27 – 23
5UX–23181–00	27 – 10
	27 – 25
3C3–23318–00	26 – 21
3C3–23319–00	26 – 22
39P–23340–00	27 – 32
3LC–23357–00	27 – 13
	27 – 28
42P–23378–00	35 – 22
39P–23405–00	26 – 10
4XV–23415–01	26 – 4
4XV–23418–00	26 – 7
3VD–23434–00	26 – 12
4JH–23434–00	34 – 2
4H7–23441–01–P6	26 – 13
3Y6–23442–00–P2	26 – 16
39P–23445–00	26 – 20
3FV–23462–00	26 – 2
39P–24106–00	28 – 32
39P–24108–00	28 – 35
5PW–2411J–01	28 – 39
	38 – 12
	38 – 18
2D1–24129–00	21 – 31
2D1–2412G–00	28 – 3
2D1–24139–00	21 – 32
5SL–2413B–00	38 – 30
	38 – 34
39P–2413Y–00	21 – 23
2D1–2414P–00	28 – 38
1RC–2416B–00	28 – 43
14B–24181–00	28 – 25

CODIGO Nº	REF. Nº
5VY–24181–00	28 – 2
5SL–24183–00	28 – 6
2D1–24184–00	21 – 21
2D1–24185–00	21 – 22
2D1–24192–00	28 – 14
39P–241A3–00	28 – 33
39P–241A4–00	28 – 36
39P–241A5–00	28 – 34
39P–241A6–00	28 – 37
39P–241B1–00	28 – 23
39P–24317–00	28 – 20
68V–24376–00	11 – 27
19B–24486–01	28 – 18
39P–24491–00	28 – 13
39P–24602–10	28 – 9
39P–2470F–10	29 – 2
39P–2470H–10	29 – 12
39P–24710–10	29 – 1
39P–24718–00	29 – 13
39P–24728–00	29 – 14
4NK–24728–00	29 – 17
22W–24741–00	29 – 18
39P–24741–00	29 – 19
42P–2474A–00	22 – 40
42P–2474W–00	22 – 41
42P–24750–10	29 – 11
39P–24768–00	29 – 21
4BP–24780–00	29 – 22
39P–24785–00	22 – 44
2D1–2478E–00	29 – 25
4BP–24792–00	29 – 23
20S–25117–00	30 – 2
39P–25168–00–98	30 – 1
39P–25181–00	30 – 10
20S–25183–00	30 – 9
146–25315–00	30 – 3
39P–25317–00	32 – 5
39P–25338–00–98	32 – 1
5EA–25364–00	32 – 6
20S–25366–10	32 – 10
4FM–25377–00	32 – 12
2D1–25381–00	32 – 22
5VY–25388–00	32 – 20
5VY–25389–01	32 – 21
5MT–25398–00	30 – 8
	32 – 9
5MT–25398–10	30 – 8
	32 – 9

CODIGO Nº	REF. Nº
5MT–25398–20	30 – 8
	32 – 9
39P–25446–00	32 – 14
4SV–25802–00	31 – 6
	31 – 17
4SV–25802–10	31 – 4
	31 – 15
3GM–25803–10	31 – 5
	31 – 16
3MA–25803–10	31 – 7
	31 – 18
39P–25805–00	31 – 8
	31 – 19
39P–2580T–10	31 – 3
39P–2580U–10	31 – 14
39P–2580W–00	33 – 3
39P–2581T–00	31 – 1
1J3–25824–00	31 – 12
	31 – 23
306–25825–01	31 – 13
	31 – 24
5SL–25827–00	33 – 17
5SL–25827–10	33 – 18
5SL–25828–01	33 – 19
2D1–2582A–00	37 – 7
39P–2582W–00	33 – 1
5SL–25838–00	33 – 7
5D0–2583H–00	37 – 17
2D1–2583V–00	37 – 5
5SL–25852–00	37 – 14
5VS–25852–00	35 – 3
20S–25854–00	35 – 5
5SL–25854–00	37 – 12
5SL–25855–00	37 – 13
5VS–25855–00	35 – 4
4BP–2585F–01	37 – 8
5VS–25867–00	35 – 11
39P–25872–00	35 – 16
39P–25874–00	37 – 21
2D1–25875–00	35 – 20
2D1–25876–00	35 – 21
2D1–25886–00	24 – 42
2D1–25894–00	37 – 11
39P–25895–00	37 – 15
5VS–2589F–00	35 – 7
5VS–2589H–00	35 – 6
5SL–25914–00	33 – 9
5DH–25916–00	33 – 14

CODIGO Nº	REF. Nº
3JD–25917–00	33 – 11
5SL–25917–00	33 – 6
13S–25919–00	31 – 9
	31 – 20
5SL–25919–00	33 – 8
39P–25921–50	33 – 10
4SV–25924–00	31 – 10
	31 – 21
8CR–25924–00	33 – 13
3GM–25925–00	31 – 11
	31 – 22
5SL–25926–00	33 – 15
39P–26111–00	34 – 1
4YR–26240–02	34 – 4
4YR–26241–02	34 – 3
39P–26246–00	34 – 5
39P–2627E–00	34 – 9
42P–26280–00	38 – 54
4KG–26281–00	34 – 10
3XW–26282–01	34 – 11
42P–26290–00	38 – 55
3C3–26298–00	38 – 56
39P–26302–00	34 – 7
5VS–26332–00	35 – 10
3C3–26335–00	34 – 13
278–27114–00	29 – 3
5VX–27114–00	36 – 17
	36 – 31
39P–27211–00	37 – 1
4BP–27222–02	37 – 9
39P–27267–00	21 – 37
39P–27311–00	36 – 1
2D1–27321–00	36 – 2
39P–27410–00	36 – 11
4BP–27413–00	36 – 12
	36 – 26
1HX–27415–00	36 – 19
	36 – 37
2D1–2741L–10	36 – 43
39P–27420–00	36 – 25
1NL–27424–00	36 – 16
	36 – 30
39P–27424–00	36 – 61
39P–27425–00	21 – 35
39P–2742L–00	36 – 50
3VR–27431–01	36 – 42
5VX–27437–00	36 – 46
	36 – 53

CODIGO Nº	REF. Nº
3VR–27441–01	36 – 49
39P–27442–00	36 – 15
39P–27443–00	36 – 29
39P–27486–00	36 – 18
39P–27487–00	36 – 36
42P–28100–10	22 – 46
42P–28199–S3	22 – 47
39P–28307–00	28 – 27
42P–28315–60	38 – 59
	38 – 60
42P–28338–00	38 – 63
42P–2834E–00	38 – 50
4XV–2834E–00	28 – 24
42P–2834F–00	38 – 52
42P–28356–00	38 – 41
42P–2835U–00	38 – 49
42P–2835V–00	38 – 51
42P–2836A–00	38 – 46
4KN–2836B–10	22 – 45
	38 – 9
42P–2836E–00	38 – 47
42P–2836F–10	38 – 11
42P–2836G–10	38 – 17
42P–2836K–00	38 – 35
42P–2836L–00	38 – 38
4FM–28372–00	28 – 28
5VX–28376–00	38 – 24
42P–28381–00	38 – 1
42P–28391–10	38 – 61
42P–28392–10	38 – 62
42P–2842A–00–P3	38 – 31
42P–2842N–00–P4	38 – 10
42P–2843J–00–P4	38 – 16
42P–2844J–00–P3	38 – 27
682–44532–00	29 – 8
4D9–81168–00	46 – 16
	46 – 26
2D1–81410–10	39 – 2
5VY–81450–00	39 – 1
23P–81670–00	46 – 20
2D1–81673–00	46 – 3
39P–81800–00	40 – 1
39P–81815–00	40 – 10
28P–81826–00	40 – 7
4XV–8182A–00	40 – 6
	40 – 9
4B5–81840–00	40 – 4
11H–81844–00	40 – 2

CODIGO Nº	REF. Nº
1FK–81847–00	40 – 3
3TB–81847–00	40 – 5
	40 – 8
4B5–81871–00	40 – 11
2C0–81940–00	47 – 14
1ST–81950–00	47 – 27
	47 – 29
5VK–81950–40	47 – 26
5JJ–81952–00	47 – 28
	47 – 30
1D7–81960–01	47 – 24
5VY–82100–00	47 – 10
5SL–82113–01	47 – 8
2D1–82116–00	47 – 41
5SL–82119–10	47 – 16
2D1–8212B–02	22 – 7
18G–82131–00	29 – 20
2D1–82131–00	47 – 12
36Y–82151–00	47 – 15
5JJ–82151–10	47 – 21
5JW–82151–10	47 – 23
5JJ–82151–30	47 – 22
39P–82157–00	47 – 18
39P–82176–00	47 – 17
39P–82309–00	46 – 7
39P–82310–10	46 – 8
5S7–82380–00	11 – 8
	46 – 30
39P–82386–10	11 – 9
39P–8246K–00	47 – 11
5SL–82511–08	47 – 9
39P–82530–00	47 – 4
3GB–82540–01	46 – 9
39P–8255P–00	47 – 7
23P–82566–60	47 – 1
5PS–82576–01	47 – 32
42P–82590–20	47 – 20
1UA–82591–00	21 – 20
4XV–82911–10	45 – 1
3YX–82917–01	45 – 8
20S–83310–20	41 – 1
1KB–83311–00	41 – 2
	41 – 7
	41 – 12
	41 – 16
3D7–83318–10	41 – 5
	41 – 10
	41 – 19

CODIGO Nº	REF. Nº
20S–83320–20	41 – 6
39P–83330–20	41 – 11
1KB–8333A–00	41 – 17
39P–83340–20	41 – 15
1KB–8334A–00	41 – 13
4GY–83350–00	47 – 31
42P–83371–00	47 – 42
39P–83500–00	42 – 1
3C3–83513–00	38 – 42
4XV–83755–03	46 – 15
5EB–83912–03	45 – 2
5JJ–83913–00	45 – 11
5VS–83922–00	35 – 9
4XV–83929–00	45 – 7
2C0–83945–00	45 – 3
5LV–83951–00	45 – 6
39P–83969–00	45 – 12
39P–83975–00	45 – 16
4HM–83980–00	35 – 12
4GL–84178–00	22 – 43
5VX–84310–00	43 – 1
5VX–84312–00	43 – 7
4SV–84314–00	43 – 3
8G9–84314–00	43 – 2
4SV–84347–00	43 – 4
4SV–84350–00	43 – 6
42P–84359–00	43 – 10
5LV–84397–00	43 – 5
39P–84710–00	44 – 1
1A2–84714–41	44 – 3
39P–84735–00	44 – 2
3C3–84736–00	44 – 4
2D1–84737–00	44 – 5
4HC–84744–00	44 – 13
2D1–84745–00	44 – 12
3Y6–85130–02	22 – 36
5VY–85720–00	46 – 11
5YP–85790–00	46 – 2
8GL–85885–00	11 – 19
5YU–85886–00	46 – 28
5VY–85896–01	46 – 25
39P–8591A–40	47 – 6
39P–8592A–00	13 – 2
5VY–8A8E0–00	46 – 12
5VY–8A8E1–00	46 – 21
3D9–H3333–10	41 – 4
	41 – 9
	41 – 14

CODIGO Nº	REF. Nº
3D9–H3333–10	41 – 18
1KB–H333A–00	41 – 3
1KB–H334A–00	41 – 8
5P0–H5885–00	11 – 13
2D1–W0041–00	35 – 2
5VX–W0042–51	37 – 6
5VX–W0046–00	33 – 12
5SL–W0047–00	33 – 5
1UY–W0048–00	33 – 16
5SL–W0057–00	33 – 4
2TV–W2470–00	29 – 26
3C3–W2587–00	35 – 1
42P–W283G–00–P4	38 – 4
39P–W8250–20	47 – 5
39P–Y2410–00–09	28 – 1
90101–08013	24 – 2
90101–10025	36 – 3
90105–06027	1 – 7
90105–06065	6 – 14
90105–06066	6 – 21
90105–06078	26 – 23
	39 – 5
90105–07004	5 – 4
90105–08101	14 – 13
90105–08180	22 – 39
90105–10158	36 – 65
90105–10211	24 – 27
	25 – 6
90105–10283	24 – 24
90105–10290	46 – 6
90105–10638	31 – 25
90109–05005	10 – 25
	10 – 27
90109–06100	14 – 14
90109–06172	22 – 27
90109–06253	22 – 8
90109–064G6	31 – 2
90109–066F0	1 – 25
90109–08170	13 – 5
90109–08195	47 – 36
90109–08203	36 – 14
	36 – 28
90109–083G4	33 – 2
90109–085G6	36 – 63
90110–05028	28 – 19
90110–05112	28 – 10
90110–06102	24 – 39
90110–06161	6 – 34

CODIGO Nº	REF. Nº
90110–06161	6 – 41
	7 – 15
	8 – 9
	9 – 13
	14 – 7
	46 – 18
	46 – 23
90110–06164	18 – 16
90110–06167	6 – 24
90110–06172	7 – 32
90110–06173	8 – 6
90110–06175	1 – 24
	46 – 27
90110–06176	16 – 15
90110–06182	8 – 14
	15 – 31
	19 – 12
90110–06200	38 – 28
	38 – 32
90110–06212	1 – 15
90110–06232	29 – 6
90110–06253	5 – 8
90110–06255	15 – 15
90110–06276	15 – 35
90110–06277	15 – 34
90110–06320	15 – 22
90110–06321	15 – 21
90110–06349	15 – 38
90110–06388	15 – 12
90110–06396	15 – 29
	15 – 41
90110–08071	36 – 23
	36 – 40
90110–08099	15 – 13
90110–10024	21 – 8
	21 – 11
90110–10028	36 – 10
90111–05002	38 – 36
	38 – 39
90111–05015	36 – 20
	36 – 38
90111–05019	28 – 30
90111–05026	37 – 24
90111–06030	22 – 5
90111–06038	10 – 29
	21 – 24
90111–06060	13 – 11
90111–06079	7 – 42

CODIGO Nº	REF. Nº
90111–06098	20 – 23
90111–10039	36 – 21
	36 – 32
90116–08087	1 – 10
90116–10023	14 – 9
90116–10032	14 – 8
90116–10048	32 – 15
90119–06230	23 – 15
90119–06257	17 – 21
90119–09012	14 – 10
90149–06022	6 – 42
90149–06064	15 – 6
90149–06067	39 – 3
90149–06134	29 – 28
90149–06298	23 – 5
90149–06302	22 – 2
	24 – 35
90150–05023	38 – 2
90153–06002	6 – 37
90154–05035	28 – 17
90157–05025	36 – 13
	36 – 27
90157–10001	21 – 4
90159–05035	44 – 7
90160–05012	22 – 35
90160–05013	10 – 28
90164–05001	38 – 64
	43 – 8
90170–06228	20 – 18
90170–08010	37 – 10
90176–06014	7 – 6
90176–10075	1 – 14
90176–28083	26 – 9
90179–05523	38 – 3
90179–08410	13 – 4
90179–10025	21 – 9
	21 – 12
90179–10029	1 – 12
90179–20007	17 – 23
90179–22019	18 – 37
90179–30006	26 – 5
90183–04039	47 – 35
90183–05042	22 – 24
	38 – 6
90183–05076	38 – 5
	38 – 14
	38 – 20
90183–05M02	22 – 19

CODIGO Nº	REF. Nº
90183–05M02	28 – 26
90185–10012	32 – 16
90185–10023	36 – 4
90185–18009	24 – 30
90185–24007	32 – 23
90201–04030	47 – 34
90201–05017	13 – 12
90201–05036	22 – 26
90201–05043	22 – 37
90201–06086	28 – 5
90201–06431	15 – 7
90201–06589	16 – 14
90201–08054	36 – 59
90201–08057	24 – 4
90201–08066	37 – 19
90201–10020	21 – 7
90201–10021	32 – 17
90201–10029	17 – 28
90201–10035	1 – 11
	1 – 13
	36 – 9
90201–10039	46 – 5
90201–10065	26 – 19
90201–10073	36 – 64
90201–12575	20 – 9
90201–12790	46 – 1
90201–16027	36 – 5
90201–18013	24 – 31
90201–20016	16 – 3
90201–20017	16 – 9
90201–22015	18 – 36
90201–25020	32 – 24
90201–257H0	18 – 38
90201–281U8	26 – 8
90202–05224	28 – 31
90202–06004	38 – 26
90202–06170	38 – 29
	38 – 33
90202–30235	26 – 6
90206–17084	36 – 22
	36 – 33
90208–20001	17 – 22
90209–08295	36 – 24
	36 – 41
90209–25011	18 – 4
90209–28008	18 – 22
90214–25003	18 – 13
90214–25004	18 – 12

CODIGO Nº	REF. Nº
90214–28002	18 – 28
90214–29002	18 – 27
90240–08005	37 – 18
90269–06001	21 – 18
90269–06003	21 – 33
90269–06008	38 – 25
	38 – 37
	38 – 40
	38 – 53
90269–07007	24 – 15
90269–07008	24 – 16
90269–07076	22 – 28
90269–07077	22 – 9
	22 – 30
90269–08058	21 – 15
90282–03001	46 – 4
90338–06004	26 – 15
90338–06018	38 – 15
	38 – 21
90338–07043	29 – 9
90340–12003	15 – 46
90340–14132	9 – 6
90340–18002	1 – 3
90340–32004	15 – 24
90387–05042	44 – 8
90387–06009	24 – 40
90387–06022	20 – 22
90387–06055	28 – 7
90387–06112	6 – 40
90387–06130	24 – 14
	24 – 38
90387–06219	24 – 34
90387–062M9	23 – 14
90387–064T3	38 – 58
90387–065J6	22 – 4
90387–065L7	21 – 30
90387–07391	7 – 31
	29 – 5
90387–08021	36 – 58
90387–0804S	20 – 4
90387–10043	24 – 26
	25 – 5
90387–10050	36 – 8
90387–10097	36 – 62
90387–1012A	24 – 11
	24 – 23
	25 – 4
90387–1211D	20 – 12

CODIGO Nº	REF. Nº
90387–25007	18 – 7
90387–25008	18 – 31
90387–28003	18 – 2
90387–28004	18 – 25
90387–28014	32 – 19
90387–28015	32 – 18
90387–31003	18 – 20
90401–10020	35 – 18
	37 – 22
90401–20008	9 – 1
90413–07023	7 – 20
90430–06014	1 – 9
	6 – 36
90430–06166	14 – 18
90430–08143	15 – 26
90430–10005	35 – 19
	37 – 23
90430–10148	46 – 10
90445–08022	23 – 11
90445–087K6	23 – 13
90445–19002	36 – 7
90446–15386	37 – 4
90450–22017	7 – 39
90450–32001	7 – 35
	7 – 37
90450–32006	6 – 33
90450–35001	7 – 9
90450–38040	6 – 3
	7 – 10
90450–56007	10 – 3
	10 – 5
90461–10010	28 – 16
90462–08057	46 – 19
90464–07259	22 – 12
90464–07M40	23 – 18
90464–10008	34 – 14
90464–12036	47 – 37
90464–12089	38 – 44
90464–13005	38 – 22
90464–13073	7 – 23
	45 – 18
	47 – 38
90464–15195	47 – 39
90464–16005	28 – 41
90464–16006	21 – 26
90464–16021	22 – 21
	22 – 34
90464–16061	47 – 46

CODIGO Nº	REF. Nº
90464–17003	24 – 17
90464–20014	38 – 23
90464–23003	11 – 35
90464–26001	12 – 10
90464–51001	46 – 17
90464–59001	47 – 44
90465–08053	46 – 14
90465–08054	46 – 24
90465–10098	43 – 12
	47 – 43
90465–13M11	11 – 37
90467–08075	23 – 12
	23 – 17
90467–09006	28 – 21
90467–10039	7 – 22
90467–11044	37 – 16
90467–11090	7 – 12
	7 – 19
	7 – 40
90467–14015	10 – 21
90467–14171	10 – 15
90467–17003	10 – 17
	10 – 19
90467–17128	12 – 8
90467–180A0	12 – 9
90467–18172	12 – 4
	12 – 6
90467–200A0	6 – 32
	6 – 43
	7 – 43
90468–15139	34 – 8
90480–01333	21 – 17
90480–01559	23 – 6
90480–08264	10 – 13
90480–11009	44 – 9
90480–12003	24 – 33
90480–12010	6 – 39
90480–12072	22 – 3
90480–13004	22 – 33
90480–13010	8 – 4
90480–13014	15 – 48
90480–14030	21 – 29
90480–14229	38 – 43
90480–14604	29 – 4
90480–15363	7 – 30
90480–18276	22 – 22
90480–20001	23 – 16
90501–064L1	19 – 9

CODIGO Nº	REF. Nº
90501–12743	36 – 44
	36 – 51
90501–230A0	17 – 20
90506–18020	36 – 6
90506–20014	37 – 3
90508–18051	17 – 27
90508–32141	20 – 11
90520–01002	44 – 6
90520–05015	22 – 17
90520–10010	45 – 15
91312–04025	47 – 33
91312–05010	28 – 11
91312–06016	10 – 1
	28 – 4
91312–06025	9 – 10
91312–06040	6 – 19
	40 – 12
91312–08030	26 – 11
	26 – 14
	27 – 33
91314–08040	27 – 31
91314–10040	21 – 6
91317–05035	34 – 12
91317–06050	34 – 6
91380–05008	43 – 11
91380–06010	47 – 40
91380–06014	15 – 49
91401–20012	37 – 20
91401–25015	36 – 48
	36 – 55
91702–08040	36 – 47
	36 – 54
91808–16023	1 – 4
	1 – 5
	1 – 6
91808–30031	6 – 23
92012–05030	47 – 2
92012–06014	24 – 13
	24 – 37
	47 – 45
92012–06020	21 – 28
92012–08035	36 – 60
92014–08012	15 – 27
92017–08020	36 – 39
92902–04100	35 – 14
92902–04600	35 – 15
92902–05200	44 – 10
92902–10200	26 – 18

CODIGO Nº	REF. Nº
92907–08600	17 – 2
93102–12106	20 – 7
93102–12372	6 – 8
93102–15212	17 – 5
93102–25017	30 – 5
93102–40330	18 – 33
93106–40013	32 – 3
93106–40041	32 – 13
93109–17071	24 – 10
	24 – 22
	25 – 3
93210–04092	14 – 3
93210–06667	6 – 27
	8 – 12
93210–09165	8 – 11
93210–14003	8 – 8
	14 – 6
93210–15566	9 – 4
93210–16325	15 – 43
93210–18397	16 – 10
93210–22298	8 – 3
93210–22382	15 – 9
	15 – 45
93210–235A1	6 – 29
	6 – 38
	7 – 16
93210–27194	15 – 18
93210–27370	6 – 30
93210–32172	15 – 25
93210–357A2	6 – 25
93210–46044	6 – 4
93210–49046	7 – 5
93210–57003	15 – 40
93305–20605	18 – 18
93306–00106	6 – 7
	19 – 3
93306–00304	17 – 19
93306–07806	32 – 4
93306–20124	15 – 2
93306–20230	16 – 11
93306–20352	30 – 4
93306–20531	32 – 2
93306–205A2	18 – 39
93306–20652	18 – 11
93306–20659	32 – 11
93306–27209	18 – 14
93310–232R9	17 – 24
93315–31502	17 – 6

CODIGO Nº	REF. Nº
93315–31758	24 – 21
	25 – 2
93315–41762	24 – 9
93315–42536	24 – 7
93317–11096	17 – 4
93317–11295	20 – 6
93317–42599	24 – 6
93399–99932	26 – 3
93399–99957	26 – 1
93440–28184	18 – 5
93440–31187	18 – 23
93440–52009	18 – 40
93440–62032	18 – 34
93450–18157	3 – 9
	3 – 11
93501–04011	36 – 45
	36 – 52
93603–12007	6 – 12
	6 – 17
93603–17070	6 – 15
93605–10108	15 – 3
93607–44002	5 – 11
93610–20189	15 – 20
93900–00030	30 – 7
	32 – 8
94112–17109	30 – 6
94118–17072	32 – 7
94580–25078	8 – 1
94582–31122	32 – 25
94591–68124	5 – 5
94682–31031	32 – 26
94701–00318	1 – 16
95022–06008	47 – 19
95022–06010	29 – 10
95022–06016	46 – 13
95022–06020	20 – 14
95022–06090	28 – 8
95022–10016	21 – 38
95024–06012	1 – 8
	7 – 2
95024–06025	6 – 5
95024–08035	13 – 9
95027–06020	45 – 5
95302–08600	24 – 3
95304–06700	20 – 19
95602–05100	22 – 38
	44 – 11
95602–05200	47 – 3

INDICE NUMERICO

CODIGO Nº	REF. Nº
95602–06200	29 – 15
95602–10200	21 – 5
	24 – 25
	24 – 28
	25 – 7
	26 – 17
95607–06200	45 – 4
95617–06100	35 – 8
95702–06500	22 – 6
	29 – 16
	29 – 24
	35 – 17
	38 – 57
95802–06008	36 – 35
95802–06010	38 – 48
95802–06014	35 – 23
95802–06016	7 – 34
95812–06010	9 – 11
95812–06050	14 – 17
95812–06060	14 – 15
95812–06070	14 – 16
95812–08016	21 – 36
95812–08050	14 – 11
95812–08060	14 – 12
95822–06025	47 – 25
95822–08025	22 – 42
95822–08035	38 – 45
97702–50014	22 – 25
97702–50016	22 – 23
	38 – 13
	38 – 19
	43 – 9
97702–50520	46 – 29
97702–60520	46 – 31
97706–04012	44 – 14
98502–04012	35 – 13
98507–04010	45 – 10
98507–05022	45 – 17
98507–05030	45 – 13
98507–05045	45 – 14
98704–03020	45 – 9
98902–05008	28 – 15
99001–07600	17 – 3
99002–10600	20 – 8
99009–10400	17 – 29
99009–12400	6 – 22
99480–10018	15 – 11
99530–08012	9 – 8
99530–10014	14 – 4
99530–10114	1 – 27
	2 – 3